OGDEN CITY

DRAWINGS FOR CONSTRUCTION OF

21ST STREET SEWER MAIN UPGRADE

MIKE CALDWELL
MAYOR

ANGELA CHOBERKA
CITY COUNCIL

KEN RICHEY
CITY COUNCIL

BART BLAIR
CITY COUNCIL

RICHARD HYER
CITY COUNCIL

LUIS LOPEZ
CITY COUNCIL

BEN NADOLSKI
CITY COUNCIL

MARCIA L. WHITE
CITY COUNCIL

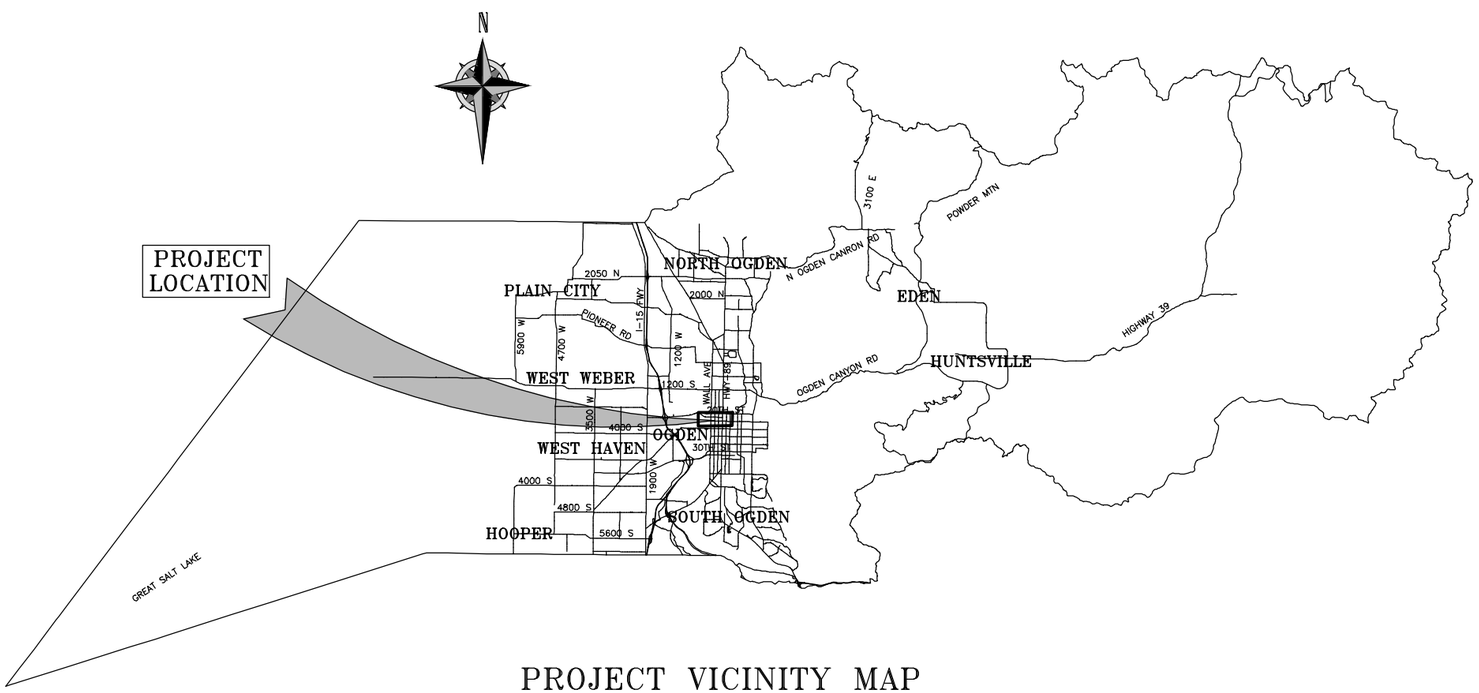

PROJECT VICINITY MAP

LICENSED PROFESSIONAL ENGINEER
3-29-24
No.10453557-2202
JOSEPH CLYDE WILLARDSON
State of Utah

APPROVED

TAYLOR NIELSEN, P.E.
CITY ENGINEER

APPROVED

JOSEPH WILLARDSON, P.E.
PROJECT ENGINEER

P:\West Jordan\2023\Projects\W23090JUT.00 - Ogden - 21st Sewer Main Upgrade\03_Design\Sheets\Title & General.dwg Mar 29, 2024 - 9:47am

SHEET INDEX

SHEET NO.	DRAWING NO.	SHEET TITLE	FILE NAME
1	G–1	COVER SHEET	TITLE & GENERAL.DWG
2	G–2	SHEET INDEX & KEY MAP	TITLE & GENERAL.DWG
3	G–3	GENERAL NOTES	TITLE & GENERAL.DWG
4	G–4	ABBREVIATIONS & LEGEND	TITLE & GENERAL.DWG
5	G–5	DATA TABLES	TITLE & GENERAL.DWG
6	G–6	SURVEY CONTROL	SURVEY CONTROL SHEET.DWG
7 – 15	C–1 – C–9	PLAN & PROFILE	21ST STREET SHEETS.DWG
16	W–1	WATER LINE DESIGN	WATERLINE DESIGN.DWG
17	BP–1	PRELIMINARY BYPASS PLAN	BYPASSPLANS.DWG
18–26	DT–1 – DT–9	DETAILS	DETAILS.DWG
27–32	BL–1 – BL–6	BORE LOGS	BORE LOGS.DWG
33–36	PV1–PV5	UDOT STANDARD DETAILS	DETAIL UDOT.DWG

N

50 0 100 200
SCALE IN FEET

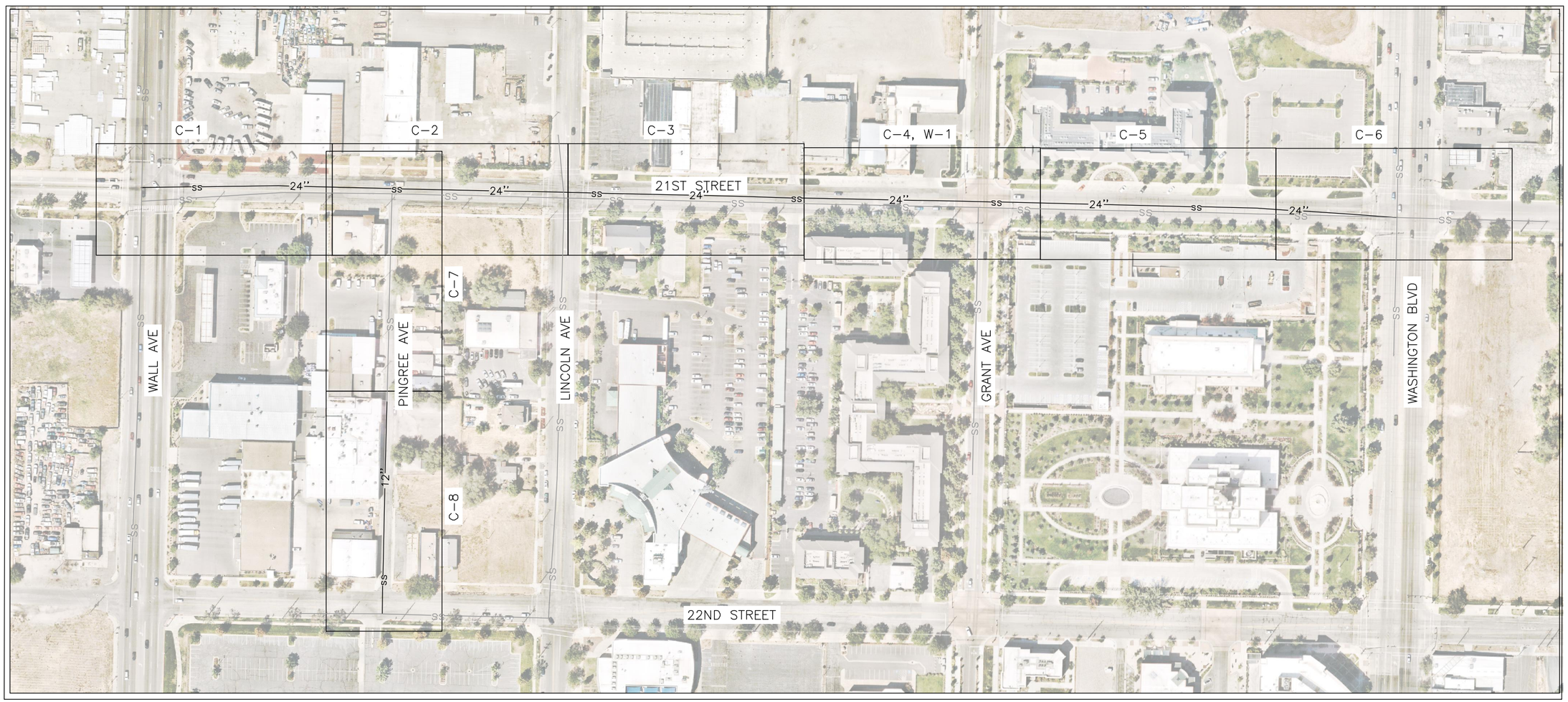

SHEET KEY MAP

SCALE: 1" = 200'

VERIFY SCALE
BAR IS ONE-HALF INCH ON ORIGINAL DRAWING

DESIGNED BY: JB
DRAWN BY: BS
CHECKED BY: VBG
APPROVED BY: JB
DATE: March 2024
ENO NO: XXXXXXX
ACCOUNT NO: ----

REVISIONS

NO.	DATE	MADE BY	AUTH. BY

OGDEN CITY
21ST STREET SEWER MAIN UPGRADE

SHEET INDEX & KEY MAP

Ogden UTAH Still Untamed

DRAWING NO.
G–2

SHEET 2 OF 36

P:\West Jordan\2023\Projects\W230903UT.00 – Ogden – 21st Sewer Main Upgrade\03_Design\Sheets\Title & General.dwg Mar 29, 2024 – 9:47am

GENERAL NOTES

NOTES	REFERENCES
1. ALL CONSTRUCTION AND MATERIALS ARE TO BE IN ACCORDANCE WITH "OGDEN CITY'S ENGINEERING STANDARDS FOR PUBLIC IMPROVEMENTS"; "2017 APWA STANDARD SPECIFICATIONS" AND OTHER APPLICABLE APPROVED STANDARDS ISSUED BY THE CONTROLLING AGENCY; THE INTERNATIONAL BUILDING CODE; AND ALL LOCAL CITY CODES AND ORDINANCES APPLICABLE, EXCEPT AS NOTED ON THIS SHEET AS "DEVIATIONS FROM STANDARDS".	
2. COORDINATION: CONTRACTOR TO NOTIFY AFFECTED AGENCIES, RESIDENTS, BUSINESSES, SCHOOLS, AND PROPERTY OWNERS 14 DAYS PRIOR TO CONSTRUCTION.	01 31 13
3. SCHEDULE: CONTRACTOR WILL PROVIDE AND UPDATE A CONSTRUCTION SCHEDULE IN ACCORDANCE WITH THE SPECIFICATIONS AND THE REGULATIONS OF THE GOVERNING AGENCY FOR WORKING IN THE PUBLIC WAY PRIOR TO CONSTRUCTION.	01 32 16
4. SOIL TESTING: CONTRACTOR TO PROVIDE MARSHALL AND/OR PROCTOR TEST DATA 24 HOURS PRIOR TO USE, CERTIFIED IN WRITING FROM A LAB RECOGNIZED AND ACCEPTED BY OGDEN CITY AND THE RIGHT-OF-WAY GOVERNING AGENCY, AS APPLICABLE.	01 45 00 31 05 13 32 11 23 33 05 20 31 23 26
5. UTILITY LOCATIONS: • ALL UTILITY LOCATIONS ARE APPROXIMATE. • CONTRACTOR TO VERIFY LOCATIONS AND DEPTHS OF UTILITIES IN THE FIELD BY POTHOLING A MINIMUM OF TWO WEEKS TIME OR 300-FEET AHEAD OF PIPELINE CONSTRUCTION TO AVOID CONFLICTS WITH DESIGNED PIPELINE GRADE AND ALIGNMENT. IF A CONFLICT ARISES RESULTING FROM THE CONTRACTOR NEGLECTING TO POTHOLE UTILITIES, THE CONTRACTOR IS TO RESOLVE THE CONFLICT WITHOUT ADDITIONAL COST OR CLAIM TO THE OWNER. • CONTRACTOR SHALL POTHOLE CRITICAL LOCATIONS AND OBTAIN ALL EXISTING PIPE O.D. PRIOR TO ORDERING OR OBTAINING MATERIALS REQUIRED FOR CONNECTIONS TO EXISTING PIPING. UTILITY SHUT-DOWNS AND OTHER WORK WILL NOT BE SCHEDULED OR ALLOWED UNTIL THIS IS ACCOMPLISHED AND MATERIALS ARE ON SITE AND APPROVED FOR USE BY THE OGDEN CITY REPRESENTATIVE. • IRRIGATION PIPELINES MAY NOT BE LOCATED THROUGH THE NORMAL BLUE STAKE PROCESS. CONTACT IRRIGATION COMPANIES AS DETAILED IN SECTION 01 31 13 PRIOR TO CONSTRUCTION.	01 31 13 00 72 00 4.3
6. CHANGES: NO CHANGE IN DESIGN LOCATION OR GRADE WILL BE MADE BY THE CONTRACTOR WITHOUT THE WRITTEN APPROVAL OF THE PROJECT ENGINEER.	01 31 13 1.2C 00 72 00 10.1
7. SURVEY CONTROL: • CONTRACTOR TO PROVIDE ALL CONSTRUCTION SURVEY REQUIRED FOR THE PROJECT. • CONTRACTOR SHALL PRESERVE AND PROTECT ALL MONUMENTS AND MONUMENT REFERENCE MARKS WITHIN THE PROJECT SITE. IF A MONUMENT MUST BE DISTURBED DURING CONSTRUCTION, CONTRACTOR SHALL COMPLY WITH THE PROVISIONS OF SECTIONS 00 72 00, 00 71 34 AND 31 05 10. • THE CONTRACTOR SHALL NOT BURY ANY FITTINGS, BENDS, CONNECTIONS, OR COUPLINGS UNTIL THE CITY SURVEYOR HAS COMPLETED THE RECORD SURVEY OF THE PIPELINE INSTALLATION TO HIS SATISFACTION. THE CONTRACTOR SHALL BE REQUIRED TO EXCAVATE AND EXPOSE ALL MATERIALS BURIED WITHOUT PRIOR AUTHORIZATION OF THE PROJECT ENGINEER OR SURVEYOR, AT HIS OWN COST. ALL COST OF RESTORATION OF EXCAVATED AREAS SHALL BE BORNE BY THE CONTRACTOR.	00 72 00 6.2A 01 71 23 00 72 00 4.4 01 71 34 00 72 00 13.5
8. ASPHALT GUARANTEE: THE CONTRACTOR SHALL FURNISH AND PLACE PERMANENT ASPHALT, PER APWA STANDARDS, EQUAL TO THE THICKNESS REQUIREMENTS OF THE GOVERNING AGENCY. THE CONTRACTOR SHALL GUARANTEE ALL ASPHALT INSTALLATIONS FOR A MINIMUM PERIOD OF ONE YEAR FROM THE DATE OF THE COMPLETED PROJECT'S ACCEPTANCE.	33 05 25
9. TEMPORARY ASPHALT: IF THE CONTRACTOR CHOOSES TO WORK ON THE PROJECT IN COLD WEATHER, THE CONTRACTOR SHALL BE RESPONSIBLE FOR OBTAINING APPROVAL FROM THE APPROPRIATE GOVERNING AGENCY PRIOR TO CONSTRUCTION. THE CONTRACTOR SHALL FURNISH AND INSTALL TEMPORARY ASPHALT. WHEN WEATHER PERMITS, THE CONTRACTOR SHALL REMOVE THE TEMPORARY ASPHALT, FURNISH AND INSTALL THE PERMANENT ASPHALT AT NO ADDITIONAL COST TO THE OWNER.	
10. CONTRACTOR RESPONSIBILITIES: • CONTRACTOR SHALL NOT ALLOW GROUNDWATER OR DEBRIS TO ENTER THE NEW PIPE DURING CONSTRUCTION. THE OPEN END OF ALL PIPES TO BE COVERED AND SEALED AT THE END OF EACH DAY. • CONTRACTOR TO INSTALL INVERT COVERS IN ALL SANITARY SEWER AND STORM DRAIN MANHOLES AFFECTED BY THE PROJECT PRIOR TO STARTING CONSTRUCTION. • CONTRACTOR WILL BE RESPONSIBLE FOR DUST CONTROL ACCORDING TO GOVERNING AGENCY STANDARDS: WET DOWN DRY MATERIALS AND RUBBISH TO CONTAIN ALL LOOSE MATERIALS. • ALTHOUGH SOME SURFACE FEATURES (FENCES, RETAINING WALLS, TREES, ETC.) HAVE BEEN CALLED OUT ON THE DRAWINGS FOR THE CONTRACTOR'S CONVENIENCE, NOT ALL ARE SHOWN OR IDENTIFIED. CONTRACTOR SHALL WALK THROUGH CONSTRUCTION AREA PRIOR TO BIDDING TO IDENTIFY SURFACE FEATURES THAT MUST BE PROTECTED OR REPLACED AS PART OF THE WORK. • CONTRACTOR SHALL TAKE PRECAUTIONARY MEASURES NECESSARY TO PROTECT EXISTING IMPROVEMENTS. ALL IMPROVEMENTS OR STRUCTURES DAMAGED BY THE CONTRACTOR'S OPERATIONS SHALL BE REPAIRED OR RECONSTRUCTED AT THE EXPENSE OF THE CONTRACTOR TO ORIGINAL OR BETTER CONDITION TO THE SATISFACTION OF THE OWNER. • THE CONTRACTOR SHALL BE REQUIRED TO KEEP ALL CONSTRUCTION ACTIVITIES WITHIN ESTABLISHED PUBLIC RIGHT-OF-WAYS, AND TEMPORARY CONSTRUCTION EASEMENTS AS SHOWN, IF ANY. THIS SHALL INCLUDE BUT NOT LIMITED TO VEHICLES AND EQUIPMENT, LIMITS OF TRENCH EXCAVATION, EXCAVATED MATERIAL AND BACKFILL STORAGE. IF THE CONTRACTOR REQUIRES ADDITIONAL CONSTRUCTION EASEMENTS, IT SHALL BE SOLELY HIS RESPONSIBILITY TO OBTAIN THESE EASEMENTS.	01 57 00 3.2 01 74 13
11. STORM WATER MANAGEMENT PLAN: CONTRACTOR TO PROVIDE A STORM WATER POLLUTION PREVENTION PLAN (SWPPP) OR EROSION SEDIMENT CONTROL PLAN TO OGDEN CITY FOR REVIEW BEFORE CONSTRUCTION BEGINS,	UTAH DEQ REGULATION R309-550-2
12. WATER AND SANITARY SEWER SEPARATION: FOLLOW REQUIREMENTS OF THE DIVISION OF DRINKING WATER OF THE UTAH DEPARTMENT OF ENVIRONMENTAL QUALITY. THE HORIZONTAL DISTANCE BETWEEN PRESSURE WATER MAINS AND SANITARY SEWER LINES SHALL BE AT LEAST TEN FEET. WHERE WATER MAINS AND SEWER LINES CROSS, THE WATER MAIN SHALL BE AT LEAST 18-INCHES ABOVE THE SEWER LINE. WATER LINES AND SEWER LINES SHALL NOT BE INSTALLED IN THE SAME TRENCH. EXCEPTIONS TO THESE REQUIREMENTS MUST BE APPROVED BY THE PROJECT ENGINEER.	
13. WATER SERVICES: • METER BOX IS TO BE PLACED IN THE PARK STRIP WHERE APPLICABLE OR WITHIN THE PUBLIC RIGHT-OF-WAY OUTSIDE ANY HARD SURFACE AREA. THE SERVICE LINE IS TO EXTEND PERPENDICULAR TO THE MAIN. • LANDSCAPING, PLANTINGS, CONCRETE, AND/OR ASPHALT TO BE REPLACED THE SAME OR BETTER. ALL SOD TO MATCH EXISTING GRADE AND NOT OVERLAP EXISTING GROUND. CONTRACTORS TO SATURATE SOD AND KEEP MOIST. EXISTING SPRINKLER SYSTEMS AND STOP & WASTE VALVES TO BE PROTECTED. ALL REPAIRS TO BE INSPECTED.	

NOTES	REFERENCES
14. SANITARY SEWER LATERALS: • SANITARY SEWER LATERALS SHALL BE PROTECTED IN PLACE OR REMOVED AND REPLACED AS PER OGDEN CITY ENGINEERING STANDARD DRAWINGS AND SPECIFICATIONS. IF A SANITARY SEWER IS TUNNELED UNDER AND NOT REPLACED, CONTRACTOR TO PROVIDE VIDEO INSPECTION TO VERIFY THAT THE GRADE AND CONDITION OF PIPE HAS NOT BEEN COMPROMISED. • IT IS THE RESPONSIBILITY OF THE CONTRACTOR TO VERIFY ANY/ALL LATERAL SIZES, LATERAL TIE IN LOCATIONS, AND TO MAKE SURE THAT THE TIE INS MEET THE REQUIRED STANDARD GRADE/ SLOPE. • A TOTAL OF 200 LF OF SEWER LATERAL IS ESTIMATED TO BE REQUIRED FOR THE TIE IN WORK	33 31 00
15. THRUST RESTRAINTS: • ALL THRUST BLOCKS SHALL BE PLACED AS DESCRIBED IN THE SPECIFICATIONS AND SHOWN ON THE STANDARD DRAWINGS. • ALL MATERIALS USED FOR WATER PROJECTS SHALL BE RATED FOR A MINIMUM 200 PSI WORKING PRESSURE.	
16. CORROSION PROTECTION: • ALL EXPOSED NUTS AND BOLTS WILL BE COATED WITH CHEVRON FM #1 NON-OXIDE GREASE AND WRAPPED IN 8-MIL POLYETHYLENE WRAP. • ALL STEEL, CAST IRON, OR DUCTILE IRON VALVES, FITTINGS, ETC., SHALL BE EPOXY COATED AND TAPE WRAPPED IN ACCORDANCE WITH AWWA C214.	
17. PIPELINE STATIONING: • STATIONS AND LENGTHS SHOWN ON THE DRAWINGS ARE CENTERLINE OF PIPE FROM CENTER OF FITTING TO CENTER OF FITTING. PROFILE DRAWINGS ARE HORIZONTAL PROJECTIONS OF THE PIPE CENTERLINE, UNLESS OTHERWISE NOTED. • WHERE CLEARANCES BETWEEN PIPELINES ARE DESIGNATED IN THE DRAWINGS, THE SPECIFIED DISTANCE SHALL REFER TO THE DISTANCE BETWEEN THE OUTSIDE EDGES OF THE PIPE.	
18. WATER LINE COVER: UNLESS OTHERWISE NOTED, CONTRACTOR TO PROVIDE A MINIMUM COVER OF 4.5 FEET FROM THE TOP OF THE WATER MAIN TO FINISHED GRADE. PIPING THAT CAN NOT BE PROVIDED THIS MINIMUM COVER WILL REQUIRE A SPECIAL DESIGN BY THE CONTRACTOR FOR REVIEW AND APPROVAL BY OGDEN CITY.	
19. WATER SHUT-DOWNS: • OPERATION OF ALL EXISTING MAIN LINE VALVES TO BE COORDINATED THROUGH OGDEN CITY 48-72 HOURS IN ADVANCE OF SHUTDOWN. CONNECTIONS TO SOME WATERLINES SERVING COMMERCIAL AREAS MAY REQUIRE NIGHT OR WEEKEND SHUTDOWNS. CONTRACTOR TO PERFORM NIGHT OR WEEKEND WORK IN THESE AREAS AT NO ADDITIONAL COST TO OWNER. • OGDEN CITY DOES NOT GUARANTEE WATER SHUT-DOWNS. CONTRACTOR TO DEVISE PLANS TO AVOID WORK STOPPAGES IN THE EVENT A SHUT-DOWN DOES NOT GO AS PLANNED • CONTRACTOR SHALL SUBMIT FOR REVIEW A SEQUENTIAL PLAN FOR CONNECTION, TESTING, AND FLUSHING OF ALL NEW WATER MAINS.	33 11 00 1.3
20. SALVAGE: ALL SALVAGED HYDRANTS, VALVES OR OTHER MATERIALS TO BE RETURNED OGDEN CITY ENGINEERING DIVISION, UNLESS NOTED OTHERWISE.	32 01 91 32 01 93
21. TREES: THE CONSTRUCTION AREA MAY CONTAIN SOME LARGE TREES THAT MAY AFFECT CONSTRUCTION ACTIVITIES. CONTRACTOR SHALL PRESERVE AND PROTECT TREES AND COORDINATE WITH CITY FORESTER.	34 41 13 2.9 34 41 13 3.6 34 41 13 3.7
22. TRAFFIC DETECTOR LOOPS: FOR TRAFFIC DETECTOR LOOP REPAIR OR REPLACEMENT REFER TO THE CURRENT UDOT STANDARD DRAWINGS TRAFFIC SIGNAL LOOP DETECTOR DETAILS (STD. DWG. NO. SL 9) AND TRAFFIC COUNTING LOOP DETECTOR DETAILS (STD. DWG. NO. SL 10)	
23. AERIAL PHOTOS IN DRAWINGS: THE AERIAL PHOTOS PROVIDED AS BACKGROUND IN THESE DRAWINGS ARE PROVIDED TO HELP CLARIFY THE WORK SITE. HOWEVER, THE PHOTOS DEPICT CONDITIONS AS THEY EXISTED IN 2022. PRESENT DAY CONDITIONS MAY VARY FROM THOSE SHOWN. CONTRACTOR SHALL VERIFY EXISTING CONDITIONS PRIOR TO BIDDING. BID SHALL INCLUDE ALL WORK REQUIRED TO COMPLETE THE PROJECT.	
24. UDOT REQUIREMENTS: • FOR ASPHALT CONSTRUCTION WITHIN THE UDOT ROW MATCH EXISTING, OR THE ANTICIPATED EXISTING OF 8 INCHES OF UDOT-APPROVED HOT MIX ASPHALT (HMA), PG-GRADE 64-34 ASPHALT BINDER, 1/2 INCH NOMINAL MAX, 7-75-115 GYRATION PER UDOT STANDARD SPECIFICATION 02741; OVER 6 INCHES UNTREATED BASE COURSE (UTBC) PER UDOT SPECIFICATION 02721; OVER 12 INCHES GRANULAR BORROW (GB) PER UDOT SPECIFICATION 02056 (WHICHEVER IS GREATER). PROVIDE DOCUMENTATION OF COMPACTION FROM A UDOT-QUALIFIED LABORATORY. • TRENCHES ARE TO BE CUT AT RIGHT ANGLES TO THE TRAVEL LANES. PATCHES REQUIRE AT LEAST A 2 INCH ROTOMILLING AT LEAST 10 FT APPROACHING AND LEAVING THE PATCH IN ALL TRAVEL LANES IMPACTED BEFORE FINAL ASPHALT PLACEMENT TO CREATE THE "T PATCH". • FOR CONCRETE PANELS BEING IMPACTED, FULL PANEL REPLACEMENT WILL BE REQUIRED. • INSTALL 9 INCHES OF RAPID STRENGTH CONCRETE (RSC) FOR ALL PANEL REPLACEMENTS IN TRAVEL LANES ACCORDING TO UDOT SPECIFICATION 03058 RAPID STRENGTH CONCRETE (RSC) AND OTHER RELATED SECTIONS; OVER 12 INCHES UNTREATED BASE COURSE (UTBC) PER UDOT SPECIFICATION 02721. • COORDINATE WORK WITH UDOT PROJECT 17427 TO ENSURE ALL PAVEMENT CUTS AND WORK WITHIN THE UDOT RIGHT-OF-WAY ARE COMPLETED PRIOR TO THE BEGINNING OF, AND NOT IN CONFLICT WITH THE PLANS OF, THE LISTED UDOT PROJECT. CONTACT THE PROJECT MANAGER LINCOLN PORT AT (435) 851-1613 OR LPORT@UTAH.GOV FOR MORE INFORMATION. (SEAL COAT FOR THE T-PATCH TO BE DETERMINED WITH COORDINATION) • COORDINATE TRAFFIC SIGNAL IMPACTS AND MODIFICATIONS WITH UDOT REGION 1 SIGNAL ENGINEER - KAREN ROYLANCE AT (801) 644-0889.	
25. UDOT GENERAL NOTES • ALL CONSTRUCTION WITHIN THE UDOT RIGHT-OF-WAY SHALL CONFORM TO THE MOST CURRENT UDOT STANDARD (INCLUDING SUPPLEMENTAL) DRAWINGS AND SPECIFICATIONS. • THE CONTRACTOR IS TO OBTAIN AN ENCROACHMENT PERMIT FROM THE APPLICABLE UDOT REGION PERMIT OFFICE PRIOR TO COMMENCING WORK WITHIN UDOT RIGHT-OF-WAY. WORKING HOUR LIMITATIONS WILL BE LISTED IN THE LIMITATIONS SECTION OF THE ENCROACHMENT PERMIT. • UDOT RESERVES THE RIGHT, AT ITS OPTION, TO INSTALL A RAISED MEDIAN ISLAND OR RESTRICT THE ACCESS TO A RIGHT-IN OR RIGHT-OUT AT ANY TIME. • OWNER, DEVELOPER, AND CONTRACTOR ARE RESPONSIBLE FOR ANY DAMAGES DIRECTLY OR INDIRECTLY WITHIN THE UDOT RIGHT-OF-WAY AS A RESULT OF DEVELOPMENT ACTIVITIES. • OWNER, DEVELOPER, AND/OR CONTRACTOR IS REQUIRED TO HIRE AN INDEPENDENT COMPANY FOR ALL TESTING WITHIN THE UDOT RIGHT-OF-WAY. • ALL SIGNS INSTALLED ON THE UDOT RIGHT-OF-WAY MUST BE HIGH INTENSITY GRADE (TYPE XI SHEETING) WITH A B3 SLIP BASE. INSTALL ALL SIGNS PER UDOT SN SERIES STANDARD DRAWINGS. • COMPLY WITH THE REQUIREMENTS OF UTAH CODE 17-23-14 (DISTURBED CORNERS - COUNTY SURVEYOR TO BE NOTIFIED - COORDINATION WITH CERTAIN STATE AGENCIES).	

SCALE: N/A

VERIFY SCALE
BAR IS ONE-HALF INCH ON ORIGINAL DRAWING

DESIGNED BY: JB
DRAWN BY: BS
CHECKED BY: VBG
APPROVED BY: JB
DATE: March 2024
EWO NO: XXXXXXX
ACCOUNT NO: ----

REVISIONS

NO.	DATE	MADE BY	AUTH. BY

OGDEN CITY
21ST STREET SEWER MAIN UPGRADE
GENERAL NOTES

Ogden UTAH Still Untamed

PROFESSIONAL ENGINEER
6-29-24
No. 9369307-2202
JOSEPH CLYDE WILLIAMSON
STATE OF UTAH

DRAWING NO. G-3

SHEET 3 OF 36

P:\West Jordan\2023\Projects\W230903UT.00 - Ogden - 21st Sewer Main Upgrade\03_Design\Sheets\Title & General.dwg Mar 29, 2024 - 9:47am

SECTION AND DETAIL IDENTIFICATION

SECTION IDENTIFICATION

(1) SECTION CUT SHOWN ON DRAWING AS:

SECTION LETTER — A

DRAWING NUMBER WHERE THE SECTION DRAWING IS LOCATED, SEE NOTE — 6

(2) THIS SECTION IS IDENTIFIED AS:

SECTION — A

SCALE: AS DESIGNATED. — 6

SECTION LETTER

DRAWING ON WHICH THE SECTION CUT IS SHOWN, SEE NOTE

DETAIL IDENTIFICATION

STD / XXX	X / XXX	DX
APWA STANDARD DETAIL	AREA SPECIFIC DETAIL	STANDARD DETAIL

AREA SPECIFIC DETAIL

(1) DETAIL IDENTIFICATION SHOWN ON DRAWING AS:

DETAIL NUMBER — 3 / 6

THE DETAIL NAME IS OPTIONAL AND LOCATED HERE, FOLLOWING DETAIL CALLOUT

DRAWING NUMBER WHERE THE DETAIL DRAWING IS LOCATED, SEE NOTE

(2) THIS DETAIL IS IDENTIFIED AS:

DETAIL — 3

SCALE: AS DESIGNATED. — 6

DETAIL NUMBER

DRAWING ON WHICH THE DETAIL CALLOUT IS LOCATED, SEE NOTE

NOTE:
IF PLAN AND SECTION (OR DETAIL CALL-OUT AND DETAIL) ARE SHOWN ON SAME DRAWING, DRAWING NUMBER IS REPLACED BY A HORIZONTAL LINE.

ABBREVIATIONS

@	AT
AB	ANCHOR BOLT
ADD'L	ADDITIONAL
AL	ALUMINUM
APPROX	APPROXIMATE
B	BORING
BL	BORING LOG
BLDG	BUILDING
BOT	BOTTOM
BTWN	BETWEEN
CB	CATCH BASIN
CP	CONCRETE PIPE
CFM	CUBIC FEET PER MINUTE
CL	CENTERLINE
CLR	CLEAR, CLEARANCE
CMP	CORRUGATED METAL PIPE
COB	CLEAN OUT BOX
CONC	CONCRETE
CONN	CONNECTION
CONST	CONSTRUCTION
CONT	CONTINUOUS
CPLG	COUPLING
CTRD	CENTERED
CTR	CENTER
CU FT	CUBIC FOOT
DIA	DIAMETER
DWG	DRAWING
DWL	DOWEL
E	BURIED ELECTRIC
EA	EACH
EF	EACH FACE
EL	ELEVATION
ELEC	ELECTRICAL LINE
ELB	ELBOW
EQ	EQUAL
EQL SP	EQUALLY SPACED
EQUIP	EQUIPMENT
EW	EACH WAY
EXIST	EXISTING
FG	FINISH GRADE
FL	FIRE LINE
FLG	FLANGE
FLR	FLOOR
FNSH	FINISH
FO	FIBER OPTIC CABLE
FRP	FIBERGLASS REINFORCED PIPE
FT	FEET OR FOOT
FTG	FOOTING
G	GAS
GA	GAGE OR GAUGE
GALV	GALVANIZED
GE	GROOVED END
GPM	GALLONS PER MINUTE
GS	GAS SERVICE
HDPE	HIGH DENSITY POLYETHYLENE
HORIZ	HORIZONTAL
HP	HORSE POWER
IE	INVERT ELEVATION
INVT	INVERT
IN	INCH
JT	JOINT
LF	LINEAR FOOT
MATL	MATERIAL
MAX	MAXIMUM
MFR	MANUFACTURER
MH	MANHOLE
MIN	MINIMUM
MISC	MISCELLANEOUS
N	NORTH
NTS	NOT TO SCALE
OC	ON CENTER
OPNG	OPENING
OHE	OVERHEAD POWER LINE
OHFO	OVERHEAD FIBER OPTIC CABLE
PS	PUMPED SEWER
PT	POINT
PVC	POLYVINYL CHLORIDE
PVMT	PAVEMENT
PW	POTABLE WATER
R	RADIUS
RBC	REINFORCED BOX CULVERT
RCP	REINFORCED CONCRETE PIPE
RDCR	REDUCER
REINF	REINFORCED, REINFORCING
REQD	REQUIRED
REHAB	REHABILITATE
S	SLOPE
SCH	SCHEDULE
SD	STORM DRAIN
SIM	SIMILAR
SPEC	SPECIFICATION(S)
SQ	SQUARE
SQ FT	SQUARE FOOT
SQ YD	SQUARE YARD
SS	SANITARY SEWER
SST	STAINLESS STEEL
ST	STREET
STA	STATION
STD	STANDARD
STL	STEEL
STRL	STRUCTURAL
STRUCT	STRUCTURE
T&B	TOP AND BOTTOM
TDH	TOTAL DEPTH IN HEAD
TFL	TELEPHONE
TH	TEST HOLE
THK	THICK OR THICKNESS
TYP	TYPICAL
URC	UNREINFORCED CONCRETE
VCP	VITRIFIED CLAY PIPE
VTP	VENT PIPING
W	WATER OR WEST
W/	WITH
W/O	WITHOUR

SYMBOLS

EXISTING FEATURES ARE SHOWN SCREENED AND WITH LOWER-CASE TEXT

SL	SERVICE LATERAL
W	WATER
SS	SANITARY SEWER
SD	STORM DRAIN
BT	BURIED TELEPHONE
BE	BURIED POWER
CTV	AERIAL CABLE TV
BCTV	BURIED CABLE TV
OHE	OVERHEAD ELECTRIC
OHFO	OVERHEAD FIBER OPTIC
FO	FIBER OPTIC
G	NATURAL GAS
IR	PRESSURIZED IRRIGATION
EOA	EDGE OF ASPHALT
PL	PROPERTY LINE
	FENCE
	TRAFFIC CONTROL CABINET
	TRAFFIC LOOP SENSORS
	POWER POLE WITH LIGHT
	POWER POLE
ME	ELECTRIC MANHOLE
E	ELECTRIC METER
EJB	ELECTRIC JUNCTION BOX
	GUY WIRE ANCHOR
	FIRE HYDRANT
WM	WATER METER
WV	WATER VALVE BOX
W	WATER MANHOLE
S	SANITARY SEWER MANHOLE
	UTILITY POTHOLE
	GEOTECHNICAL BORE HOLE
D	STORM DRAIN MANHOLE
G	GAS MANHOLE
GV	GAS VALVE BOX
	STREET SIGN
MB	MAILBOX
C	COMMUNICATION MANHOLE
C	COMMUNICATION PEDESTAL
H	COMMUNICATION HAND HOLE
IRB	IRRIGATION CONTROL BOX
	BOLLARD
	WATER LEVEL
	SUGGESTED BYPASS ROUTE
	SURVEY MONUMENT
	CURB AND GUTTER
	TREE

FITTING SCHEDULE

VALVES	V8 — SIZE IN INCHES; FITTING DESIGNATION (VALVE). V8 (8" VALVE)
COUPLINGS	C8 — SIZE IN INCHES; FITTING DESIGNATION (COUPLING). C8 (8" COUPLING)
REDUCERS	R86 — SIZE IN INCHES (SMALL END); SIZE IN INCHES (LARGE END); FITTING DESIGNATION (REDUCER). R86 (8" X 6" REDUCER)
TEES	T86 — SIZE IN INCHES (BRANCH); SIZE IN INCHES (THRU PIPE); FITTING DESIGNATION (TEE). T86 (8" X 8" X 6" TEE). P8 8" PLUG. X88 (8" X 8" CROSS)
BENDS	B84 — TYPE OF BEND (SEE BEND LEGEND); SIZE IN INCHES; FITTING DESIGNATION (BEND). B84 (8" 90° BEND). BEND LEGEND: 1 — 11.25°; 2 — 22.5°; 3 — 45°; 4 — 90°
NOTES	1. UNLESS NOTED OTHERWISE, FITTINGS WITH A CONNECTION TO ANOTHER FITTING OR VALVE SHALL HAVE FLANGED CONNECTIONS. ALL FITTINGS WITH A CONNECTION TO A STRAIGHT RUN OF PIPE SHALL HAVE MECHANICAL JOINTS. ALL FITTINGS TO BE CLASS 52 DUCTILE IRON PER APWA SECTION 33 05 05. 2. UNLESS NOTED OTHERWISE, ALL VALVES SHALL BE GATE VALVES PER APWA SECTION 33 12 16 WITH SLIP TYPE VALVE BOX AND COVER. 3. ALL FITTINGS AND APPURTENANCES SHALL BE EQUIPPED WITH THRUST BLOCKS PER THE SPECIFICATIONS AND STANDARD DRAWINGS. CONTRACTOR SHALL PROVIDE TEMPORARY THRUST RESTRAINT AS NECESSARY DURING CONSTRUCTION. 4. NOT ALL FITTINGS ARE SHOWN. CONTRACTOR SHALL INSTALL ALL FITTINGS REQUIRED TO FOLLOW THE ALIGNMENT SHOWN IN THE DRAWINGS. REGARDLESS OF WHETHER SUCH FITTINGS ARE CALLED OUT. WHERE POSSIBLE, THE CONTRACTOR MAY DEFLECT PIPE JOINTS AS ALLOWED BY THE PIPE MANUFACTURER, BUT NO MORE THAN 3 DEGREES, TO ACHIEVE THE DESIRED ALIGNMENT. WHERE THIS IS NOT POSSIBLE, THE CONTRACTOR SHALL INSTALL THE REQUIRED FITTINGS AT NO ADDITIONAL COST TO THE OWNER.

SCALE: N/A

VERIFY SCALE
BAR IS ONE-HALF INCH ON ORIGINAL DRAWING

DESIGNED BY: JB
DRAWN BY: BS
CHECKED BY: VBG
APPROVED BY: JB
DATE: March 2024
ENG NO: XXXXXXX
ACCOUNT NO: ----

REVISIONS

NO.	DATE		MADE BY	AUTH. BY

OGDEN CITY
21ST STREET SEWER MAIN UPGRADE
ABBREVIATIONS & LEGEND

Ogden UTAH Still Untamed

DRAWING NO. G-4

SHEET 4 OF 36

P:\West Jordan\2023\Projects\W230903UT.00 - Ogden - 21st Sewer Main Upgrade\03_Design\Sheets\Title & General.dwg Mar 29, 2024 - 9:47am

MANHOLE DATA TABLE

MANHOLE	STATION	OFFSET	NORTHING	EASTING	RIM ELEVATION (FT)	INVERT ELEVATION (FT)	DEPTH (FT)	MANHOLE SIZE (IN)	WORK REQUIRED	SHEET
MH741	10+35.08	23.50 RT	3607542.5840'	1508732.4480'	4294.92	4281.82	13.1	60	PROTECT MH IN PLACE, PLUG SD CONNECTIONS	C-1
NEWMH-1	10+35.16	0.00	3607566.0785'	1508732.9868'	4295.03	4281.71	13.3	84	INSTALL NEW 84" DOGHOUSE MH	C-1
NEWMH-2	12+87.52	0.00	3607569.3614'	1508985.3175'	4293.51	4283.29	10.2	60	INSTALL NEW 60" MANHOLE	C-1
MH12397	12+92.19	10.02 RT	3607559.2430'	1508989.7650'	4293.58	4283.74	9.8	60	ABANDON MANHOLE	C-1
MH12398	14+97.19	10.00 RT	3607554.6930'	1509194.7050'	4293.61	4285.03	8.6	60	REMOVE AND DISPOSE	C-2
NEWMH-3	14+97.22	0.00	3607564.6930'	1509194.9691'	4293.56	4283.84	9.7	60	INSTALL NEW 60" MANHOLE	C-2
NEWMH-4	18+11.60	0.00	3607557.1860'	1509509.2605'	4294.32	4284.50	9.8	60	INSTALL NEW 60" MANHOLE	C-3
MH10299	18+12.83	10.00 RT	3607547.1620'	1509510.2650'	4294.36	4285.64	8.7	60	REHAB, ABANDON EXISTING SD CONNECTIONS, INSTALL CORROSION PROTECTION	C-3
NEWMH-5	20+66.18	0.00	3607551.4250'	1509763.7800'	4294.86	4285.06	9.8	60	INSTALL NEW 60" MANHOLE	C-3
MH10404	20+66.47	10.00 RT	3607541.4250'	1509763.7800'	4294.86	4285.77	9.1	60	ABANDON MANHOLE	C-3
NEWMH-6	22+33.00	0.00	3607546.6963'	1509930.5249'	4295.46	4285.46	10.0	60	INSTALL NEW 60" MANHOLE	C-4
MH10403	22+33.10	10.00 RT	3607536.6970'	1509930.4430'	4295.35	4286.62	8.7	60	ABANDON MANHOLE	C-4
MH10402	23+22.24	9.30 RT	3607535.6950'	1510019.5760'	4295.64	4286.91	8.7	60	ABANDON MANHOLE	C-4
NEWMH-7	25+68.51	0.00	3607540.3017'	1510265.9758'	4296.71	4286.18	10.5	60	INSTALL NEW 60" MANHOLE	C-4
NEWMH-14	25+78.59	18.92 RT	3607521.1967'	1510275.6998'	4296.72	4288.43	8.3	48	INSTALL NEW 48" MANHOLE	C-4
MH10401	25+78.78	10.00 RT	3607530.1180'	1510276.0590'	4296.88	4287.98	8.9	60	ABANDON MANHOLE	C-4
NEWMH-8	28+33.55	0.00	3607534.0200'	1510530.9420'	4298.07	4287.47	10.6	60	INSTALL NEW 60" MANHOLE	C-5
MH10405	28+33.78	10.00 RT	3607524.0200'	1510530.9420'	4298.10	4288.57	9.5	60	ABANDON MANHOLE	C-5
NEWMH-9	30+90.30	0.00	3607528.0020'	1510787.6250'	4299.75	4288.73	11.0	60	INSTALL NEW 60" MANHOLE	C-6
MH10406	30+90.96	10.00 RT	3607518.0020'	1510787.6250'	4299.73	4289.05	10.7	60	ABANDON MANHOLE	C-6
MH667	33+47.83	0.00	3607510.9710'	1511044.5870'	4302.58	4289.77	12.8	72	REMOVE AND DISPOSE	C-6
NEWMH-12	33+47.83	0.00	3607510.9710'	1511044.5870'	4302.58	4290.00	12.6	72	INSTALL NEW 72" MANHOLE	C-6
NEWMH-15	50+27.85	0.00	3607545.4955'	1509194.4772'	4293.67	4286.89	6.8	48	INSTALL NEW 48" MANHOLE	C-7
NEWMH-10	53+94.24	0.00	3607179.2135'	1509185.3395'	4294.74	4287.27	7.5	48	INSTALL NEW 48" MANHOLE	C-8
MH1876	54+01.51	0.00	3607171.9450'	1509185.1590'	4294.58	4287.33	7.3	48	REMOVE AND DISPOSE	C-8
MH12396	54+91.61	0.00	3607081.8550'	1509183.6790'	4295.15	4287.36	7.8	60	REMOVE AND DISPOSE	C-8
MH12394	57+27.69	0.00	3606845.8520'	1509178.0080'	4295.87	4288.67	7.2	48	REMOVE AND DISPOSE	C-8
NEWMH-13	57+27.69	0.00	3606845.8520'	1509178.0080'	4295.87	4285.99	9.9	48	INSTALL NEW 48" MANHOLE	C-8
NEWMH-11	57+91.31	0.00	3606782.2463'	1509176.4796'	4295.20	4285.55	9.6	60	INSTALL NEW 60" MANHOLE	C-8
NEWMH-16	22+33.25	18.90 RT	3607527.7875'	1509930.3700'	4295.07	4288.07	7.0	48	INSTALL NEW 48" MANHOLE	C-4
NEWMH-17	18+08.37	26.06 LT	3607583.2612'	1509506.6476'	4293.93	4286.81	7.1	48	INSTALL NEW 48" MANHOLE	C-3

ABANDON STORM DRAIN QTY ESTIMATE

MANHOLE	SIZE (INCH)	LENGTH (FT)	VOLUME (CF)
MH12398	10	30	16.4
MH12398	10	35	19.1
MH10299	12	35	27.5
MH10299	18	40	70.7
MH10299	18	65	114.9
MH10401	15	50	61.4
MH10404	15	50	61.4
MH10405	10	30	16.4

TEST HOLE SUMMARY

TH #	SHEET	STATION	OFFSET	SIZE	TYPE	MATERIAL	OWNER	GROUND EL	DEPTH TO TOP (FT)	SURFACE TYPE	PAVEMENT DEPTH	COMMENTS
TH-1	C-4	25+86.61	LT. 45.955	108"x60"	Stormdrain	Concrete	Ogden City	4297.009	1.8	Asphalt	8"	No groundwater observed
TH-2	C-4	26+06.35	RT. 59.098	16"	Water	Ductile Iron	Ogden City	4296.488	6.4	Concrete	8"	No groundwater observed
TH-3	C-4	26+09.78	LT. 45.927	16"	Water	Ductile Iron	Ogden City	4297.207	4.8	Dirt	-	No groundwater observed
TH-4	C-4	26+13.56	LT. 45.745	4"	Gas	Plastic	Dominion Energy	4297.184	3.5	Dirt	-	Groundwater at 10 ft depth

BORE HOLE SUMMARY

BORING #	SHEET	STATION	OFFSET	DETAIL SHEET	GROUND EL	DEPTH	GROUNDWATER DEPTH	GROUNDWATER EL	ASPHALT THICKNESS (INCH)	CONCRETE PAVEMENT THICKNESS (IN)
B-1	C-1	12+61.98	RT. 20.35	BL-1	4291	21.5	12.0	4279.0	6.5	7
B-2	C-8	53+66.41	RT. 2.28	BL-2	4292	21.5	8.5	4283.5	1.5	6.5
B-3	C-3	19+17.97	RT. 5.82	BL-3	4292	21.5	8.0	4284.0	2.5	8.5
B-4	C-4	24+36.80	RT. 6.09	BL-4	4293	21.5	13.0	4280.0	4	9
B-5	C-5	27+50.86	RT. 3.71	BL-5	4295	21.5	15.0	4280.0	5	8
B-6	C-6	30+87.21	RT. 4.09	BL-6	4297	21.5	15.0	4282.0	5	8

SCALE: N/A

VERIFY SCALE
BAR IS ONE-HALF INCH ON ORIGINAL DRAWING

DESIGNED BY: JB
DRAWN BY: BS
CHECKED BY: VBG
APPROVED BY: JB
DATE: March 2024
EWO NO: XXXXXXX
ACCOUNT NO: ----

REVISIONS

NO.	DATE	MADE BY	AUTH. BY

OGDEN CITY
21ST STREET SEWER MAIN UPGRADE

DATA TABLES

DRAWING NO. G-5

SHEET 5 OF 36

P:\West Jordan\2023\Projects\W230903UT.00 - Ogden - 21st Sewer Main Upgrade\03_Design\Sheets\Title & General.dwg Mar 29, 2024 - 9:47am

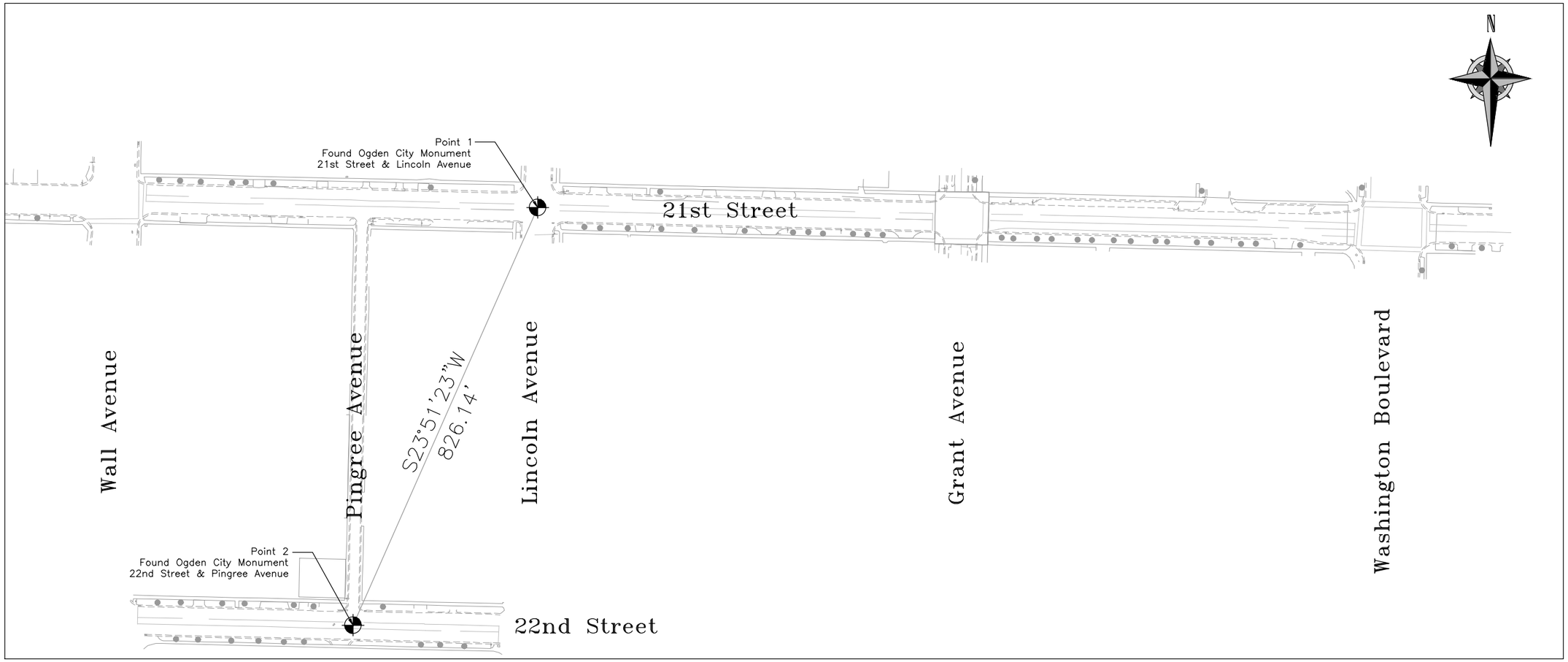

SURVEY CONTROL NOTES:

1. THE "PROJECT COORDINATES" AND BEARINGS AND DISTANCES DERIVED THEREFROM ARE EXPRESSED IN THE NAD 83 US STATE PLANE UTAH CENTRAL ZONE COORDINATE SYSTEM DEFINED AS FOLLOWS:
   HORIZONTAL DATUM = NORTH AMERICAN DATUM OF 1983 (N.A.D. 83) (2011) Epoch 2010.
   VERTICAL DATUM = NORTH AMERICAN VERTICAL DATUM OF 1988 (N.A.V.D. 88)
   COORDINATE SYSTEM = US STATE PLANE 1983, UTAH NORTH ZONE (4301)
   GEOID MODEL = GEOID18
   UNITS = US SURVEY FOOT

2. THE CONTROL SURVEY WAS PERFORMED IN FEBRUARY 2023. ALL SURVEY CONTROL COORDINATES WERE ESTABLISHED USING THE UTAH REFERENCE NETWORK GLOBAL POSITIONING SYSTEM (TURN GPS).

3. CONTROL POINT MARKS ARE SUBJECT TO THE EFFECTS OF SURFACE ACTIVITY AND SEASONAL MOVEMENTS. MARKS MAY ALSO BE DISTURBED, DAMAGED, OR REMOVED AFTER THE COMPLETION OF THIS SURVEY. CONTROL POINT POSITIONS SHOULD BE FIELD VERIFIED PRIOR TO SUBSEQUENT SURVEY ACTIVITIES.

PRIMARY CONTROL POINTS BASED ON THE UTAH REFERENCE NETWORK GLOBAL POSITIONING SYSTEM (TURN GPS)				
NAME	STATE PLANE NORTHING	STATE PLANE EASTING	ELEVATION	DESCRIPTION
1	3607552.702	1509515.242	4293.94	OGDEN CITY MONUMENT #2100S0200E
2	3606797.145	1509181.112	4295.48	OGDEN CITY MONUMENT #2200S0150E

SCALE: 1" = 200'

VERIFY SCALE
BAR IS ONE-HALF INCH ON ORIGINAL DRAWING

DESIGNED BY: JS
DRAWN BY: JS
CHECKED BY: JS
APPROVED BY: JS
DATE: March 2024
ENG NO: XXXXXXX
ACCOUNT NO: ----

NO.	DATE	REVISIONS	MADE BY	AUTH. BY

OGDEN CITY
21ST STREET SEWER MAIN UPGRADE
SURVEY CONTROL

DRAWING NO. G-6
SHEET 6 OF 36

P:\West Jordan\2023\Projects\W230903UT.00 - Ogden - 21st Sewer Main Upgrade\Survey\Survey Control Sheet.dwg Mar 29, 2024 - 9:47am

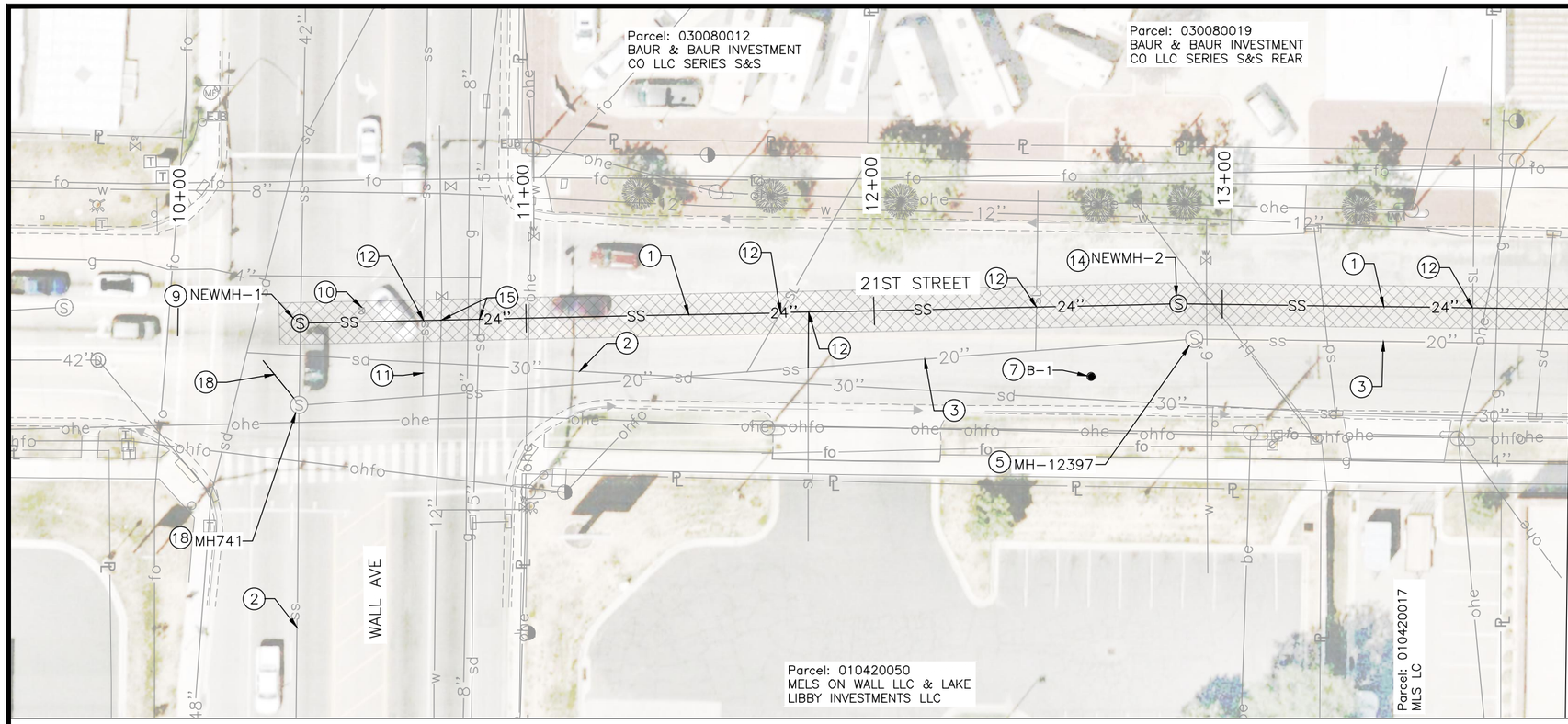

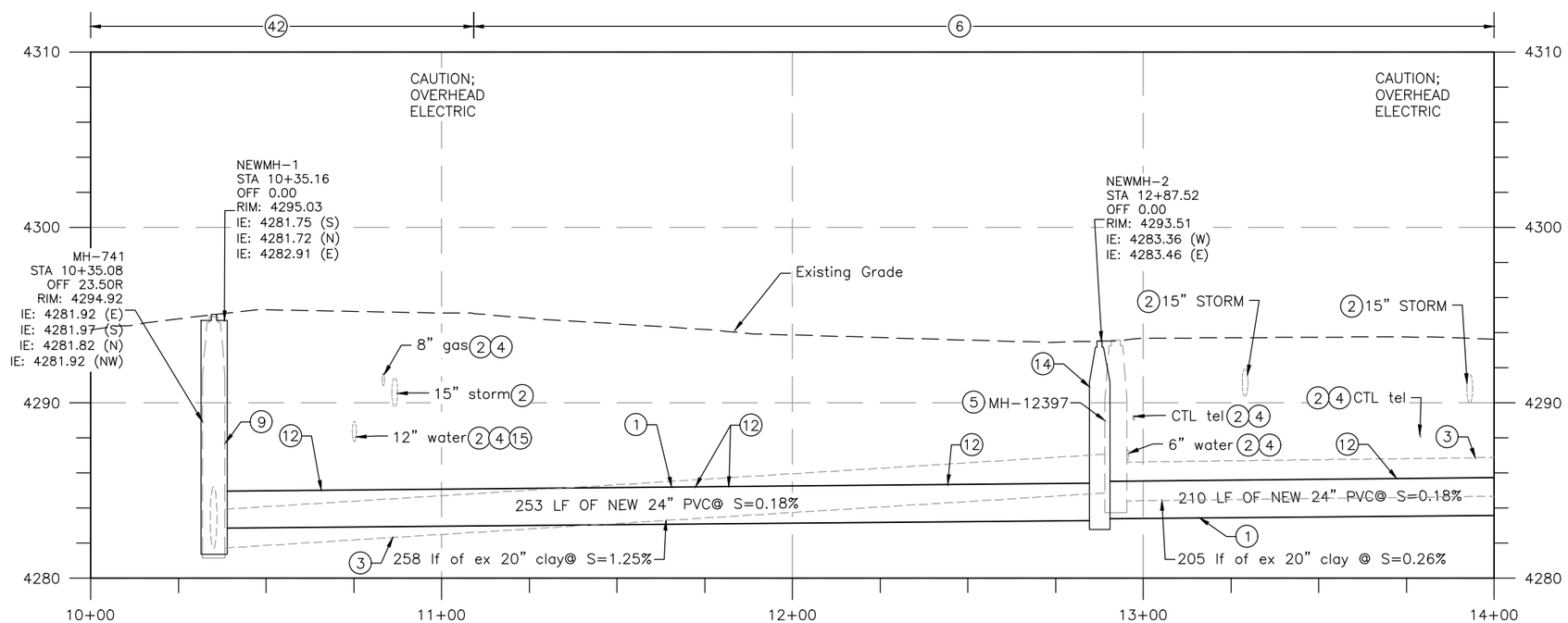

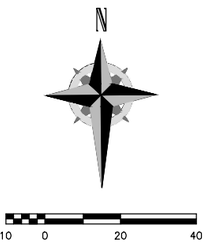

SHEET NOTES

1 INSTALL NEW SDR-35 24" PVC SEWER USING OPEN TRENCH METHOD PER OGDEN CITY STANDARD SPECIFICATIONS, SEE DETAIL 6 & 7 ON SHEET DT-5 STA 10+35.16 TO STA 14+00.00

2 PROTECT EXISTING UTILITY IN PLACE OR COORDINATE RELOCATION AS REQUIRED. SEE GENERAL NOTE 5 ON SHEET G-3

3 ABANDON EXISTING 20" AND TRACER PIPES SEWER WITH FLOWABLE FILL

4 LOCATION AND DEPTH OF EXISTING UTILITY IS APPROXIMATE. CONTRACTOR TO VERIFY. SEE GENERAL NOTE 5 ON SHEET G-3

5 ABANDON EXISTING MANHOLE WITH SAND. SEE DETAIL 5 ON SHEET DT-4

6 PAVEMENT RESTORATION, SEE SHEET DT-2 FOR RESTORATION DETAILS. SEE GENERAL NOTE 24 ON SHEET G-2 FOR PAVEMENT RESTORATION WITHIN UDOT ROW.

7 GEOTECHNICAL BORING, SEE BORE HOLE SUMMARY ON SHEET G-5 AND SHEET BL-1
B-1: STA. 12+62.61 RT 11.35'

9 INSTALL NEW 84" DOGHOUSE SEWER MANHOLE, SEE DETAIL NO. 8 ON DT-6

10 RESET SURVEY MONUMENT AS NEEDED PER OGDEN CITY STANDARDS MONUMENT ID: 2100S0100E

11 ABANDON EXISTING SEWER STUB AND INACTIVE LATERALS. DO NOT RECONNECT

12 RECONNECT EXISTING SEWER LATERAL TO NEW SEWER MAIN PER OGDEN CITY STANDARD SPECIFICATIONS, SEE DETAIL 3 ON DT-3 AND DETAIL 11 ON DT-7. EXTEND OR TRIM EXISTING SERVICE LINE AS NEEDED. ABANDON THE EXISTING SEWER LATERAL UP TO THE NEW CONNECTION POINT WITH FLOWABLE FILL, SEE GENERAL NOTE 14 ON G-3

14 INSTALL NEW 60" SEWER MANHOLE, SEE DETAIL NO. 1 ON SHEET DT-1

15 LOCATE AND EXPOSE EXISTING UTILITY PRIOR TO STARTING CONSTRUCTION

18 PLUG AND ABANDON EXISTING 42"x42" STORM CONNECTION

42 UDOT ROW. SEE GENERAL NOTE 24 ON SHEET G-3 FOR TRENCHING, ASPHALT RESTORATION AND OTHER UDOT REQUIREMENTS.

APPROXIMATE TRENCH AREA. SEE DETAIL 6 & 7 ON SHEET DT-5

SCALE:
HORIZONTAL SCALE: 1" = 40'
VERTICAL SCALE: 1" = 8'

VERIFY SCALE
BAR IS ONE-HALF INCH ON ORIGINAL DRAWING

DESIGNED BY: JB
DRAWN BY: BS
CHECKED BY: VBG
APPROVED BY: JB
DATE: March 2024
ENG NO: XXXXXXX
ACCOUNT NO: ----

REVISIONS

NO.	DATE	MADE BY	AUTH. BY

OGDEN CITY
21ST STREET SEWER MAIN UPGRADE

PLAN & PROFILE

Ogden City UTAH Salt Lake Valley

PROFESSIONAL ENGINEER LICENSED No. 7049507-2202 JOSEPH CLYDE WILLARDSON STATE OF UTAH 5-29-24

DRAWING NO.
C-1

SHEET 7 OF 36

P:\West Jordan\2023\Projects\W230903UT.00 - Ogden - 21st Sewer Main Upgrade\03_Design\Sheets\21st Street Sheets - (1).dwg Mar 29, 2024 - 9:48am

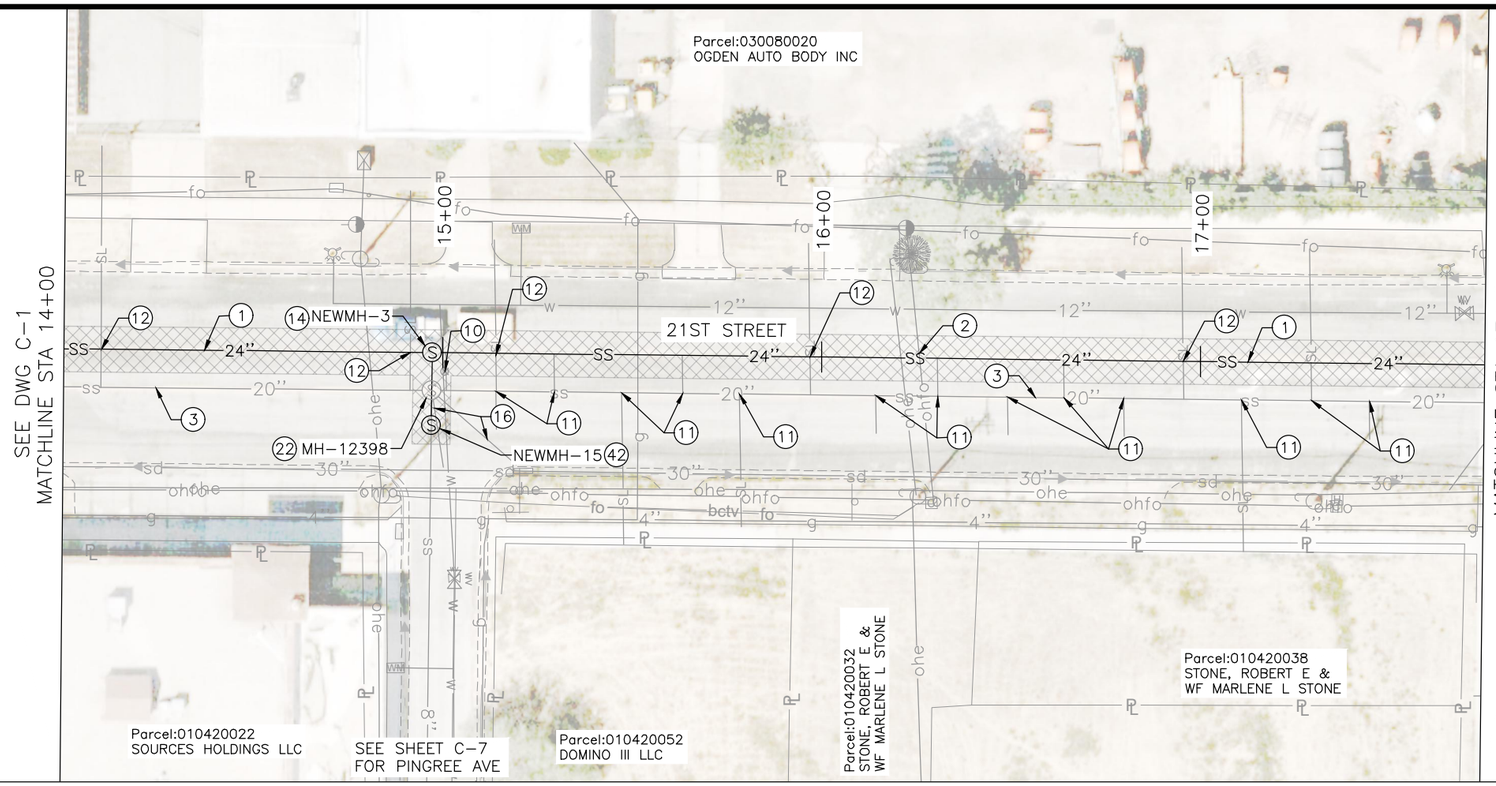

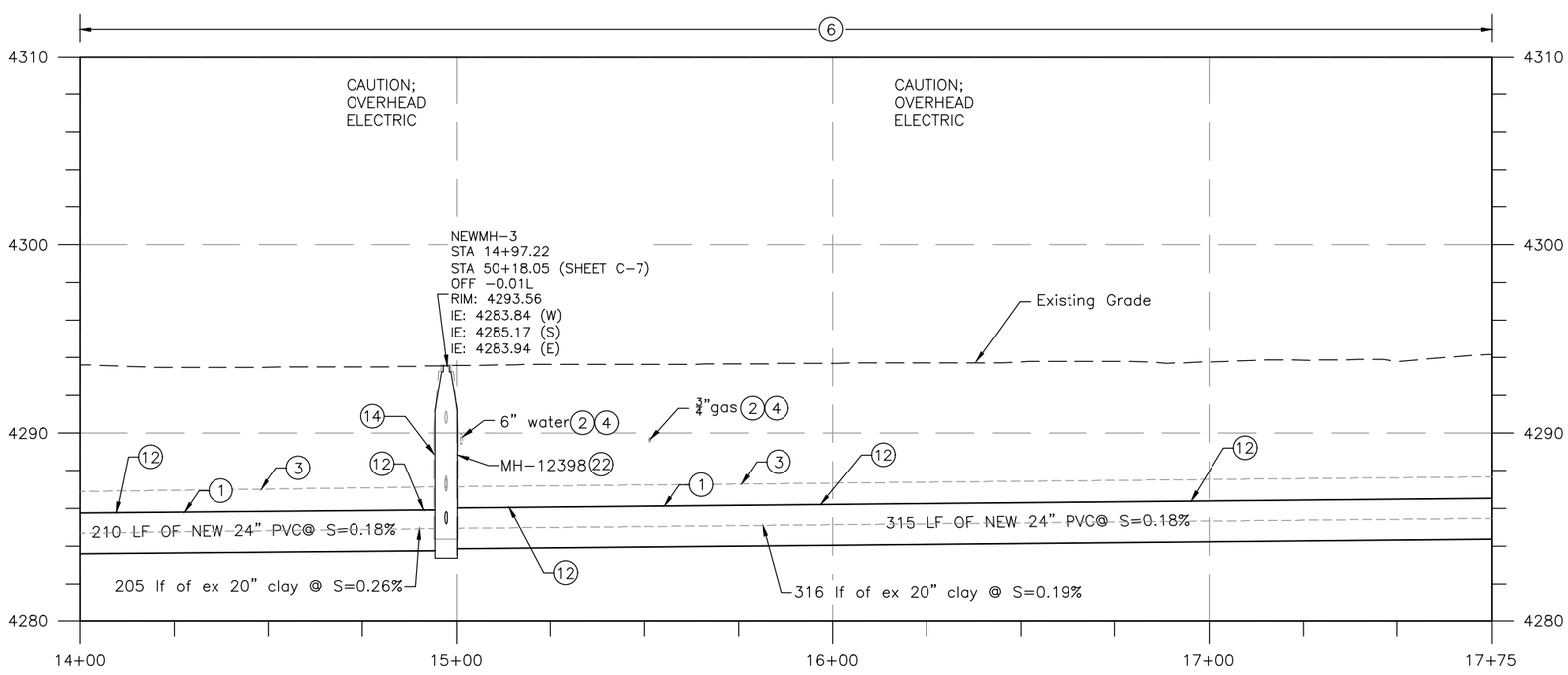

N

10 0 20 40
SCALE IN FEET

SHEET NOTES

1 INSTALL NEW SDR-35 24" PVC SEWER USING OPEN TRENCH METHOD PER OGDEN CITY STANDARD SPECIFICATIONS, SEE DETAIL 6 & 7 ON SHEET DT-5 STA 14+00.00 TO STA 17+75.00

2 PROTECT EXISTING UTILITY IN PLACE OR COORDINATE RELOCATION AS REQUIRED. SEE GENERAL NOTE 5 ON SHEET G-3

3 ABANDON EXISTING 20" AND TRACER PIPES SEWER WITH FLOWABLE FILL

4 LOCATION AND DEPTH OF EXISTING UTILITIES IS APPROXIMATE. CONTRACTOR TO VERIFY. SEE GENERAL NOTE 5 ON SHEET G-3

6 PAVEMENT RESTORATION, SEE SHEET DT-2 FOR RESTORATION DETAILS

10 RESET SURVEY MONUMENT AS NEEDED PER OGDEN CITY STANDARDS MONUMENT ID: 2100S0150E

11 ABANDON EXISTING SEWER STUB AND INACTIVE LATERALS. DO NOT RECONNECT

12 RECONNECT EXISTING SEWER LATERAL TO NEW SEWER MAIN PER OGDEN CITY STANDARD SPECIFICATIONS, SEE DETAIL 3 ON DT-3 AND DETAIL 11 ON DT-7. EXTEND OR TRIM EXISTING SERVICE LINE AS NEEDED. ABANDON THE EXISTING SEWER LATERAL UP TO THE NEW CONNECTION POINT WITH FLOWABLE FILL, SEE GENERAL NOTE 14 ON G-3

14 INSTALL NEW 60" SEWER MANHOLE, SEE DETAIL NO. 1 ON SHEET DT-1

16 ABANDON EXISTING STORM DRAIN CONNECTION WITH FLOWABLE FILL. SEE TABLE ON SHEET G-5 FOR ESTIMATED QUANTITIES

22 REMOVE AND DISPOSE OF EXISTING MANHOLE

42 INSTALL NEW 48" SEWER MANHOLE, SEE DETAIL NO.1 ON SHEET DT-1

APPROXIMATE TRENCH AREA. SEE DETAIL 6 & 7 ON SHEET DT-5

SCALE:
HORIZONTAL SCALE: 1" = 40'
VERTICAL SCALE: 1" = 8'

VERIFY SCALE
BAR IS ONE-HALF INCH ON ORIGINAL DRAWING

DESIGNED BY: JB
DRAWN BY: BS
CHECKED BY: VBG
APPROVED BY: JB
DATE: March 2024
EWO NO: XXXXXXX
ACCOUNT NO: ----

REVISIONS

NO.	DATE	MADE BY	AUTH. BY

OGDEN CITY
21ST STREET SEWER MAIN UPGRADE

PLAN & PROFILE

Ogden Fun Still Uptown!

PROFESSIONAL ENGINEER
No. 7040667-2202
JOSEPH CLYDE WILLARDSON
STATE OF UTAH
3-29-24

DRAWING NO.
C-2

SHEET 8 OF 36

P:\West Jordan\2023\Projects\W23090JUT.00 - Ogden - 21st Sewer Main Upgrade\03_Design\Sheets\21st Street Sheets - (1).dwg Mar 29, 2024 - 9:48am

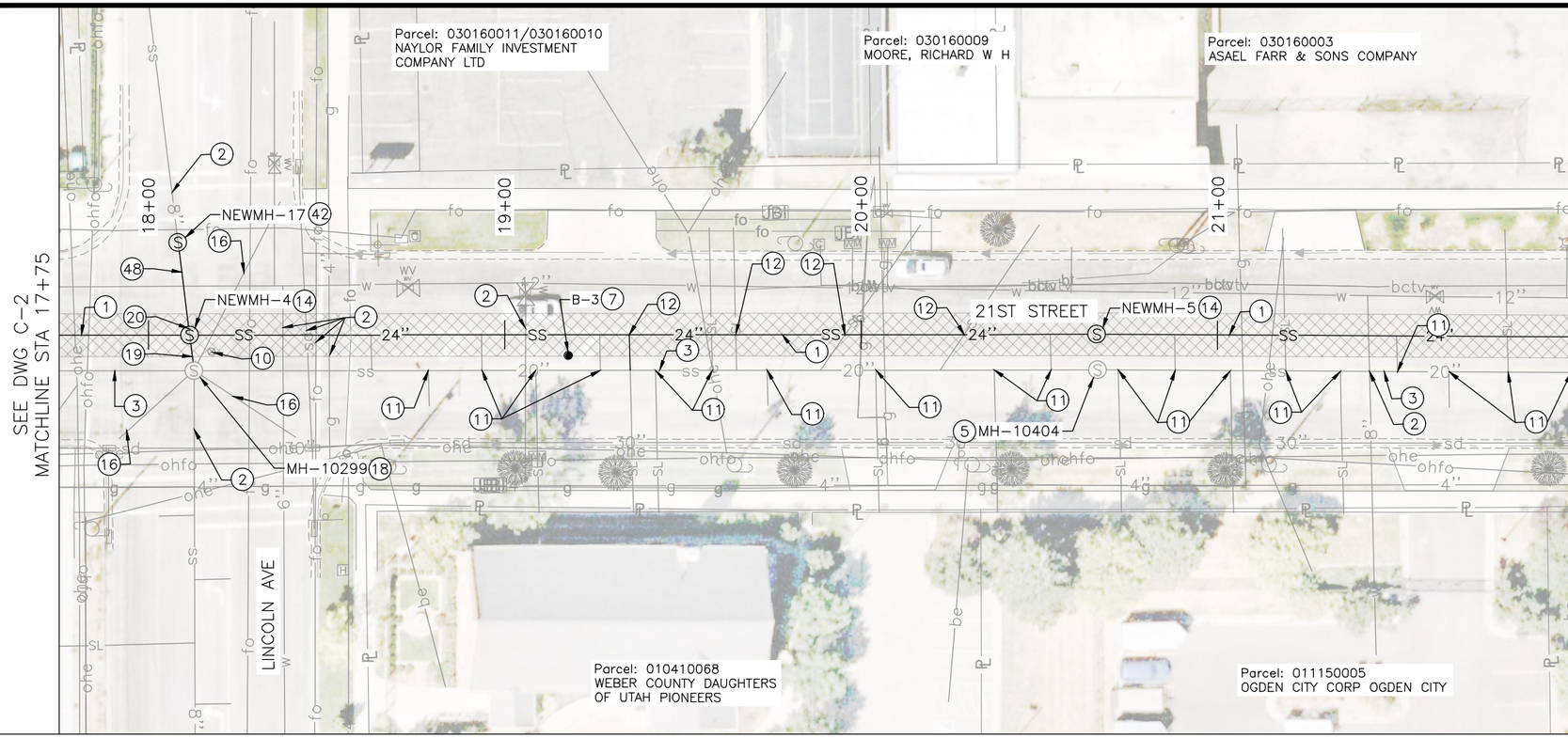

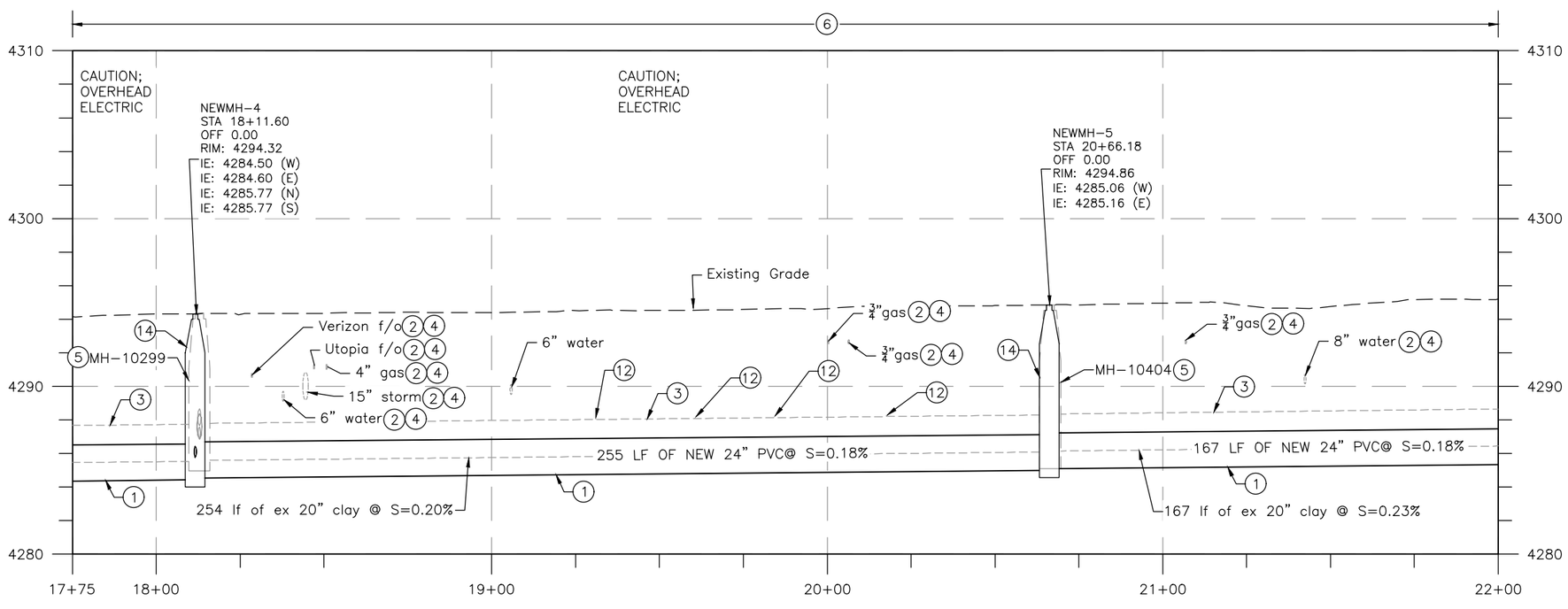

N

10 0 20 40
SCALE IN FEET

SHEET NOTES

1 INSTALL NEW SDR-35 24" PVC SEWER USING OPEN TRENCH METHOD PER OGDEN CITY STANDARD SPECIFICATIONS, SEE DETAIL 6 & 7 ON SHEET DT-5 STA 17+75.00 TO STA 22+00.00

2 PROTECT EXISTING UTILITY IN PLACE OR COORDINATE RELOCATION AS REQUIRED. SEE GENERAL NOTE 5 ON SHEET G-3

3 ABANDON EXISTING 20" AND TRACER PIPES SEWER WITH FLOWABLE FILL

4 LOCATION AND DEPTH OF EXISTING UTILITIES IS APPROXIMATE. CONTRACTOR TO VERIFY. SEE GENERAL NOTE 5 ON SHEET G-3

5 ABANDON EXISTING MANHOLE WITH SAND. SEE DETAIL 5 ON SHEET DT-4

6 PAVEMENT RESTORATION, SEE SHEET DT-2 FOR RESTORATION DETAILS

7 GEOTECHNICAL BORING, SEE BORE HOLE SUMMARY ON SHEET G-5 AND SHEET BL-3
B-3: STA. 19+17.81 LT 4.14'

10 RESET SURVEY MONUMENT AS NEEDED PER OGDEN CITY STANDARDS
MONUMENT ID: 2100S0200E

11 ABANDON EXISTING SEWER STUB AND INACTIVE LATERALS. DO NOT RECONNECT

12 RECONNECT EXISTING SEWER LATERAL TO NEW SEWER MAIN PER OGDEN CITY STANDARD SPECIFICATIONS, SEE DETAIL 3 ON DT-3 AND DETAIL 11 ON DT-7. EXTEND OR TRIM EXISTING SERVICE LINE AS NEEDED. ABANDON THE EXISTING SEWER LATERAL UP TO THE NEW CONNECTION POINT WITH FLOWABLE FILL, SEE GENERAL NOTE 14 ON G-3

14 INSTALL NEW 60" SEWER MANHOLE, SEE DETAIL NO.1 ON SHEET DT-1

16 ABANDON EXISTING STORM DRAIN CONNECTION WITH FLOWABLE FILL. SEE TABLE ON SHEET G-5 FOR ESTIMATED QUANTITIES

1 18 REHAB EXISTING MH WITH CORROSION RESISTANT LINER (QUADEX GEOKRETE GEOPOLYMER), SEE VORTEXCOMPANIES.COM FOR PRODUCT SPECIFICATIONS

19 EXTEND EXISTING 8" SEWER MAIN TO NEW SEWER MANHOLE. SEE SHEET C-9 FOR PROFILES. SEE DETAIL 4 ON SHEET DT-4
STA 18+11.60 OFF 0.00 TO
STA 18+12.83 OFF 10.00

20 CONNECT EXISTING 8" PIPE TO NEW SEWER MANHOLE. USE WATERTIGHT CONNECTION AND NON-SHRINK GROUT, SEE SHEET C-9 FOR PROFILES

42 INSTALL NEW 48" SEWER MANHOLE, SEE DETAIL NO.1 ON SHEET DT-1

48 INSTALL NEW SDR-35 8" PVC SEWER USING OPEN TRENCH METHOD PER OGDEN CITY STANDARDS
STA 18+08.37 OFF -26.06 TO
STA 18+11.60 OFF 0.00
SEE SHEET C-9 FOR PROFILES

APPROXIMATE TRENCH AREA. SEE DETAIL 6 & 7 ON SHEET DT-5

SCALE:
HORIZONTAL SCALE: 1" = 40'
VERTICAL SCALE: 1" = 8'

VERIFY SCALE
BAR IS ONE-HALF INCH ON ORIGINAL DRAWING

DESIGNED BY: JB
DRAWN BY: BS
CHECKED BY: VBG
APPROVED BY: JB
DATE: March 2024
ENG NO.: XXXXXXX
ACCOUNT NO.: ----

REVISIONS

NO.	DATE	MADE BY	AUTH. BY

OGDEN CITY
21ST STREET SEWER MAIN UPGRADE

PLAN & PROFILE

Ogden UTAH Salt Lake Metropolitan

PROFESSIONAL ENGINEER
No. 7049507-2202
JOSEPH CLYDE WILLARDSON
3-29-24
LICENSED
STATE OF UTAH

DRAWING NO.
C-3

SHEET 9 OF 36

P:\West Jordan\2023\Projects\W230903UT.00 - Ogden - 21st Sewer Main Upgrade\03_Design\Sheets\21st Street Sheets - (1).dwg Mar 29, 2024 - 9:49am

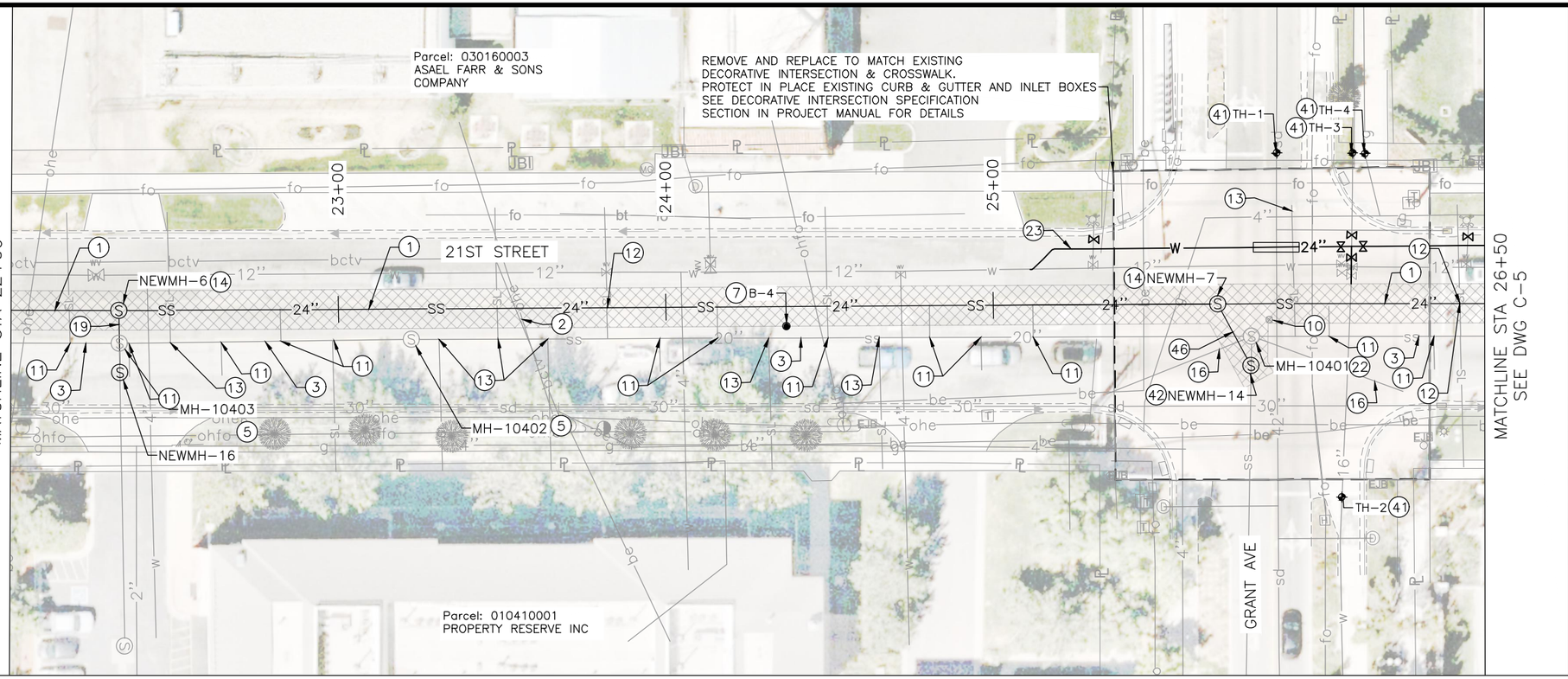

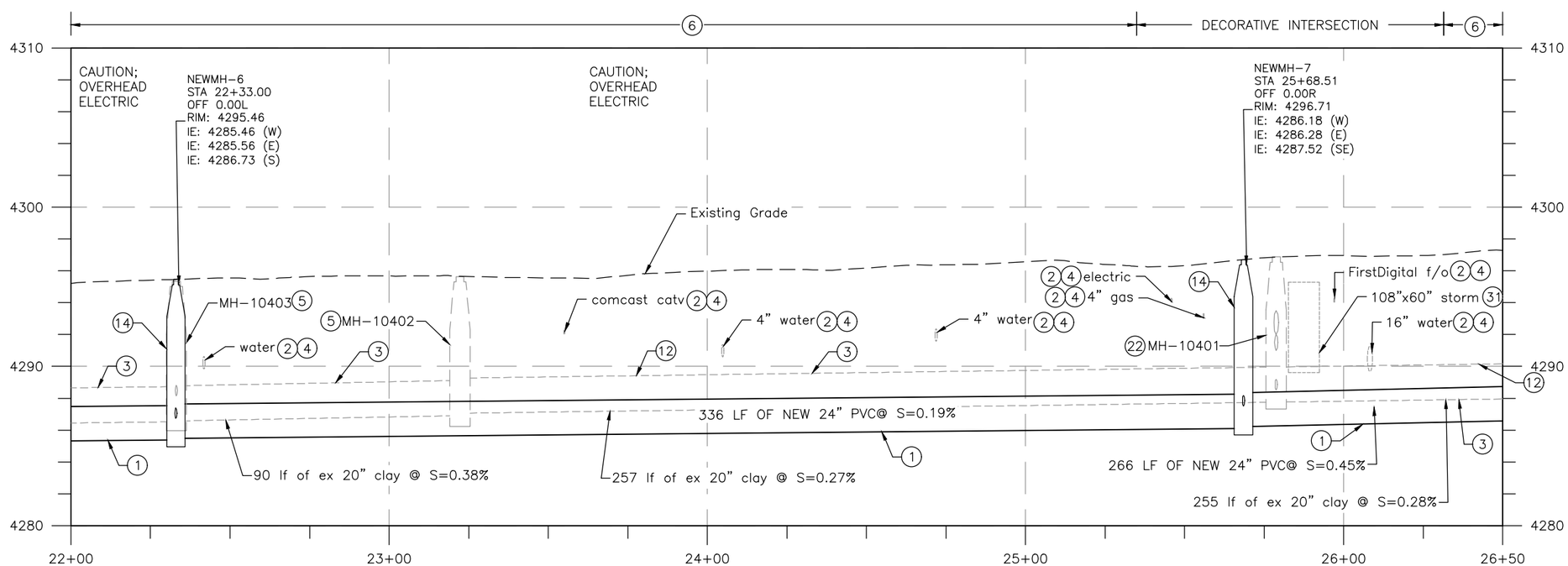

N

10 0 20 40
SCALE IN FEET

SHEET NOTES

1 INSTALL NEW SDR-35 24" PVC SEWER USING OPEN TRENCH METHOD PER OGDEN CITY STANDARD SPECIFICATIONS, SEE DETAIL 6 & 7 ON SHEET DT-5 STA 22+00.00 TO STA 26+50.00

2 PROTECT EXISTING UTILITY IN PLACE OR COORDINATE RELOCATION AS REQUIRED. SEE GENERAL NOTE 5 ON SHEET G-3

3 ABANDON EXISTING 20" AND TRACER PIPES SEWER WITH FLOWABLE FILL

4 LOCATION AND DEPTH OF EXISTING UTILITIES IS APPROXIMATE. CONTRACTOR TO VERIFY. SEE GENERAL NOTE 5 ON SHEET G-3

5 ABANDON EXISTING MANHOLE WITH SAND. SEE DETAIL 5 ON SHEET DT-4

6 PAVEMENT RESTORATION, SEE SHEET DT-2 FOR RESTORATION DETAILS

7 GEOTECHNICAL BORING, SEE BORE HOLE SUMMARY ON SHEET G-5 AND SHEET BL-3 B-4: STA. 24+36.67 LT 3.52'

10 RESET SURVEY MONUMENT AS NEEDED PER OGDEN CITY STANDARDS MONUMENT ID: 2100S0300E

11 ABANDON EXISTING SEWER STUB AND INACTIVE LATERALS. DO NOT RECONNECT

12 RECONNECT EXISTING SEWER LATERAL TO NEW SEWER MAIN PER OGDEN CITY STANDARD SPECIFICATIONS, SEE DETAIL 3 ON DT-3 AND DETAIL 11 ON DT-7. EXTEND OR TRIM EXISTING SERVICE LINE AS NEEDED. ABANDON THE EXISTING SEWER LATERAL UP TO THE NEW CONNECTION POINT WITH FLOWABLE FILL, SEE GENERAL NOTE 14 ON G-3

13 SERVICE LATERAL STATUS UNKNOWN. DYE TEST REQUIRED

14 INSTALL NEW 60" SEWER MANHOLE, SEE DETAIL NO.1 ON SHEET DT-1

16 ABANDON EXISTING STORM DRAIN CONNECTION WITH FLOWABLE FILL. SEE TABLE ON SHEET G-5 FOR ESTIMATED QUANTITIES

19 EXTEND EXISTING 8" SEWER MAIN TO NEW SEWER MANHOLE. SEE SHEET C-8 FOR PROFILES. SEE DETAIL 4 ON SHEET DT-4 STA 22+33.00 OFF 0.00 TO STA 22+33.14 OFF 12.87

22 REMOVE AND DISPOSE OF EXISTING MANHOLE

23 SEE SHEET W-1 FOR NEW 24" DI WATER LINE DESIGN

31 PROTECT CULVERT IN PLACE BY PROVIDING ADEQUATE SUPPORT TO THE CULVERT STRUCTURE DURING SEWER INSTALLATION. BACKFILL WITH FLOWABLE FILL

41 SEE SHEET G-5 FOR TEST HOLE DETAILS

42 INSTALL NEW 48" SEWER MANHOLE, SEE DETAIL NO.1 ON SHEET DT-1

46 INSTALL NEW SDR-35 8" PVC SEWER USING OPEN TRENCH METHOD PER OGDEN CITY STANDARD SPECIFICATIONS, SEE DETAIL 6 & 7 ON SHEET DT-5 STA 25+68.51 TO STA 25+78.59

APPROXIMATE TRENCH AREA. SEE DETAIL 6 & 7 ON SHEET DT-5

SCALE:
HORIZONTAL SCALE: 1" = 40'
VERTICAL SCALE: 1" = 8'

VERIFY SCALE
BAR IS ONE-HALF INCH ON ORIGINAL DRAWING

DESIGNED BY: JB
DRAWN BY: BS
CHECKED BY: VBG
APPROVED BY: JB
DATE: March 2024
EWO NO.: XXXXXXX
ACCOUNT NO.: ----

REVISIONS

NO.	DATE	MADE BY	AUTH. BY

OGDEN CITY
21ST STREET SEWER MAIN UPGRADE

PLAN & PROFILE

Ogden Civil Engineering & Land Surveying

PROFESSIONAL ENGINEER
No. 7040667-2202
JOSEPH C. LUTZE
WILLIAMS
STATE OF UTAH
5-29-24

DRAWING NO.
C-4

SHEET 10 OF 36

P:\West Jordan\2023\Projects\W230903UT.00 - Ogden - 21st Sewer Main Upgrade\03_Design\Sheets\21st Street Sheets - (1).dwg Mar 29, 2024 - 9:49am

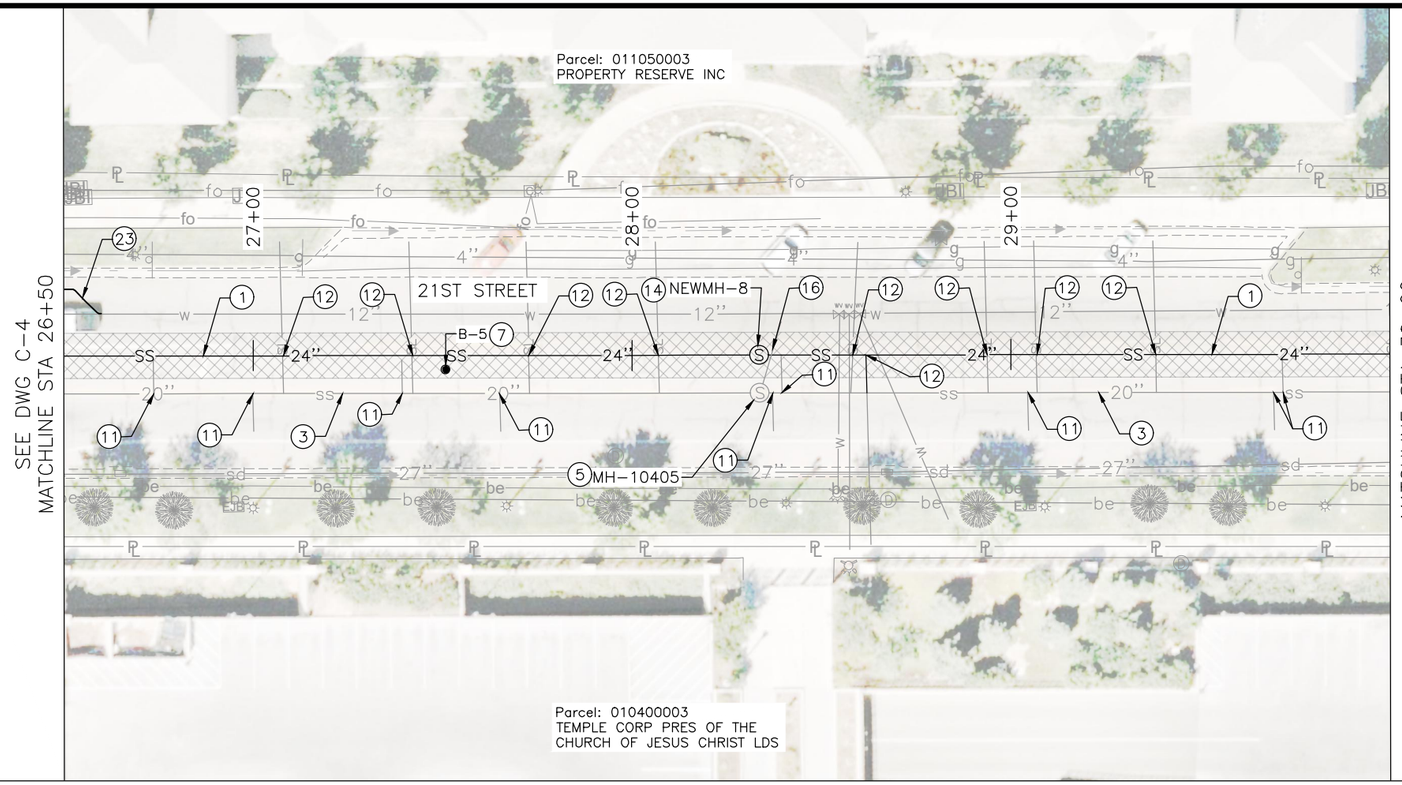

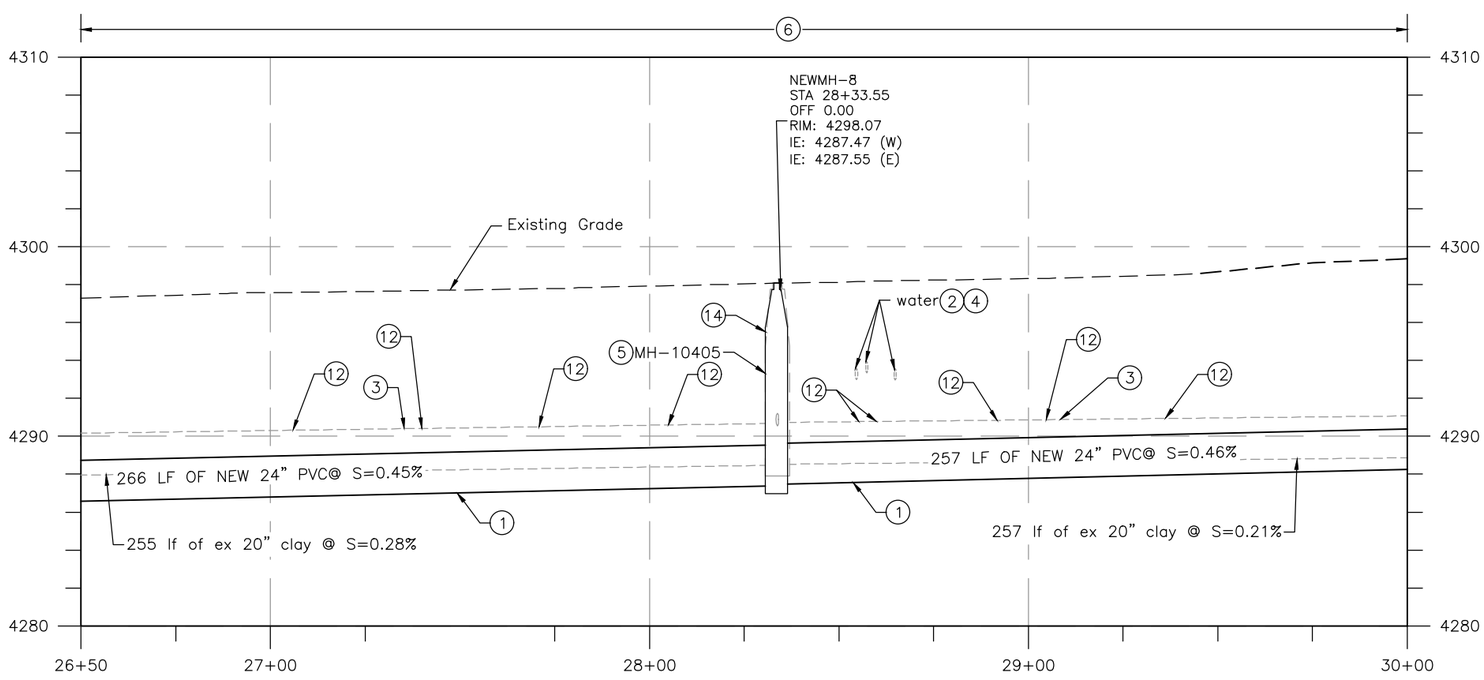

N

10 0 20 40
SCALE IN FEET

SHEET NOTES

1 INSTALL NEW SDR-35 24" PVC SEWER USING OPEN TRENCH METHOD PER OGDEN CITY STANDARD SPECIFICATIONS, SEE DETAIL 6 & 7 ON SHEET DT-5 STA 26+50.00 TO STA 30+00.00

2 PROTECT EXISTING UTILITY IN PLACE OR COORDINATE RELOCATION AS REQUIRED. SEE GENERAL NOTE 5 ON SHEET G-3

3 ABANDON EXISTING 20" AND TRACER PIPES SEWER WITH FLOWABLE FILL

4 LOCATION AND DEPTH OF EXISTING UTILITIES IS APPROXIMATE. CONTRACTOR TO VERIFY. SEE GENERAL NOTE 5 ON SHEET G-3

5 ABANDON EXISTING MANHOLE WITH SAND. SEE DETAIL 5 ON SHEET DT-4

6 PAVEMENT RESTORATION, SEE SHEET DT-2 FOR RESTORATION DETAILS

7 GEOTECHNICAL BORING, SEE BORE HOLE SUMMARY ON SHEET G-5 AND SHEET BL-5
B-5: STA. 27+50.70 LT 6.29'

11 ABANDON EXISTING SEWER STUB AND INACTIVE LATERALS. DO NOT RECONNECT

12 RECONNECT EXISTING SEWER LATERAL TO NEW SEWER MAIN PER OGDEN CITY STANDARD SPECIFICATIONS, SEE DETAIL 3 ON DT-3 AND DETAIL 11 ON DT-7. EXTEND OR TRIM EXISTING SERVICE LINE AS NEEDED. ABANDON THE EXISTING SEWER LATERAL UP TO THE NEW CONNECTION POINT WITH FLOWABLE FILL, SEE GENERAL NOTE 14 ON G-3

14 INSTALL NEW 60" SEWER MANHOLE, SEE DETAIL NO. 1 ON SHEET DT-1

16 ABANDON EXISTING STORM DRAIN CONNECTION WITH FLOWABLE FILL. SEE TABLE ON SHEET G-5 FOR ESTIMATED QUANTITIES

23 SEE SHEET W-1 FOR NEW 24" DI WATER LINE DESIGN

APPROXIMATE TRENCH AREA. SEE DETAIL 6 & 7 ON SHEET DT-5

SCALE:
HORIZONTAL: 1" = 40'
VERTICAL SCALE: NS

VERIFY SCALE
BAR IS ONE-HALF INCH ON ORIGINAL DRAWING

DESIGNED BY: JB
DRAWN BY: BS
CHECKED BY: VBG
APPROVED BY: JB
DATE: March 2024
ENG NO: XXXXXXX
ACCOUNT NO: ----

REVISIONS

NO.	DATE	MADE BY	AUTH. BY

OGDEN CITY
21ST STREET SEWER MAIN UPGRADE

PLAN & PROFILE

DRAWING NO.
C-5

SHEET 11 OF 36

P:\West Jordan\2023\Projects\W230903UT.00 - Ogden - 21st Sewer Main Upgrade\03_Design\Sheets\21st Street Sheets - (1).dwg Mar 29, 2024 - 9:50am

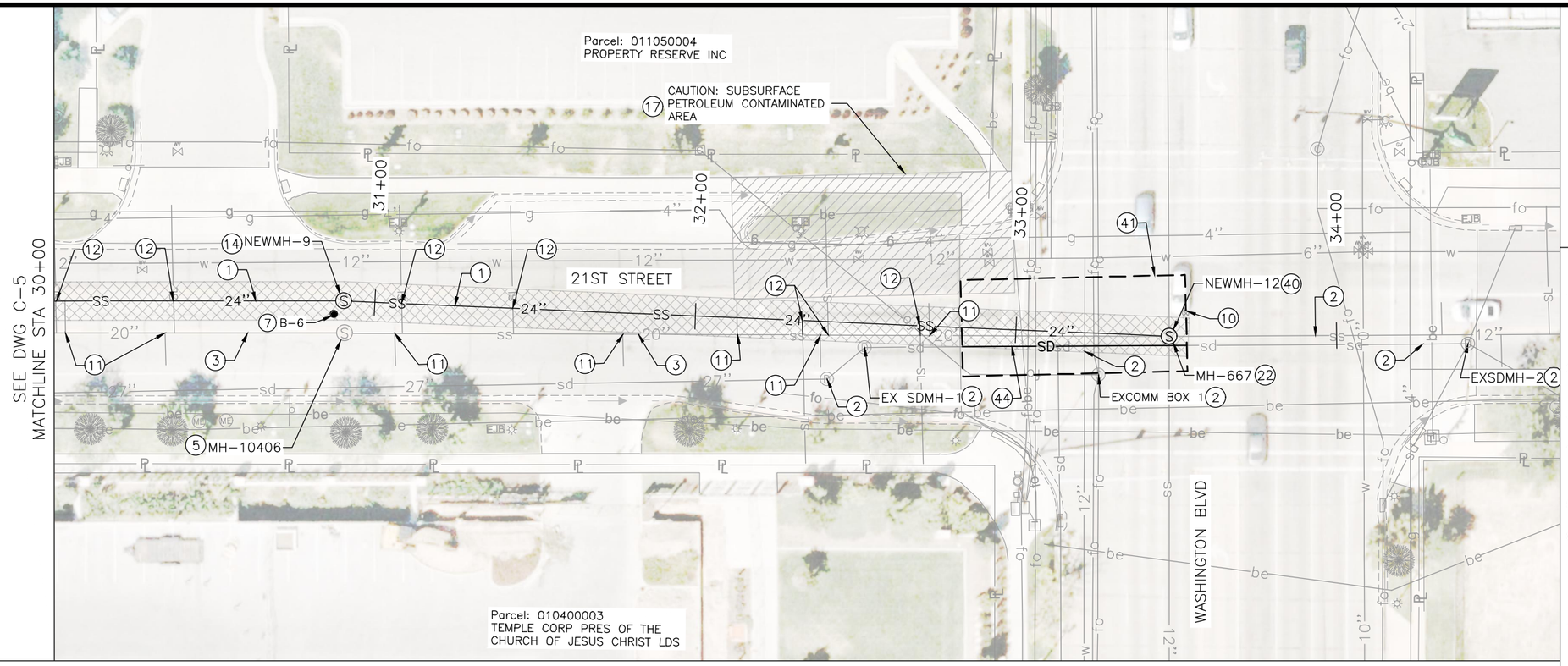

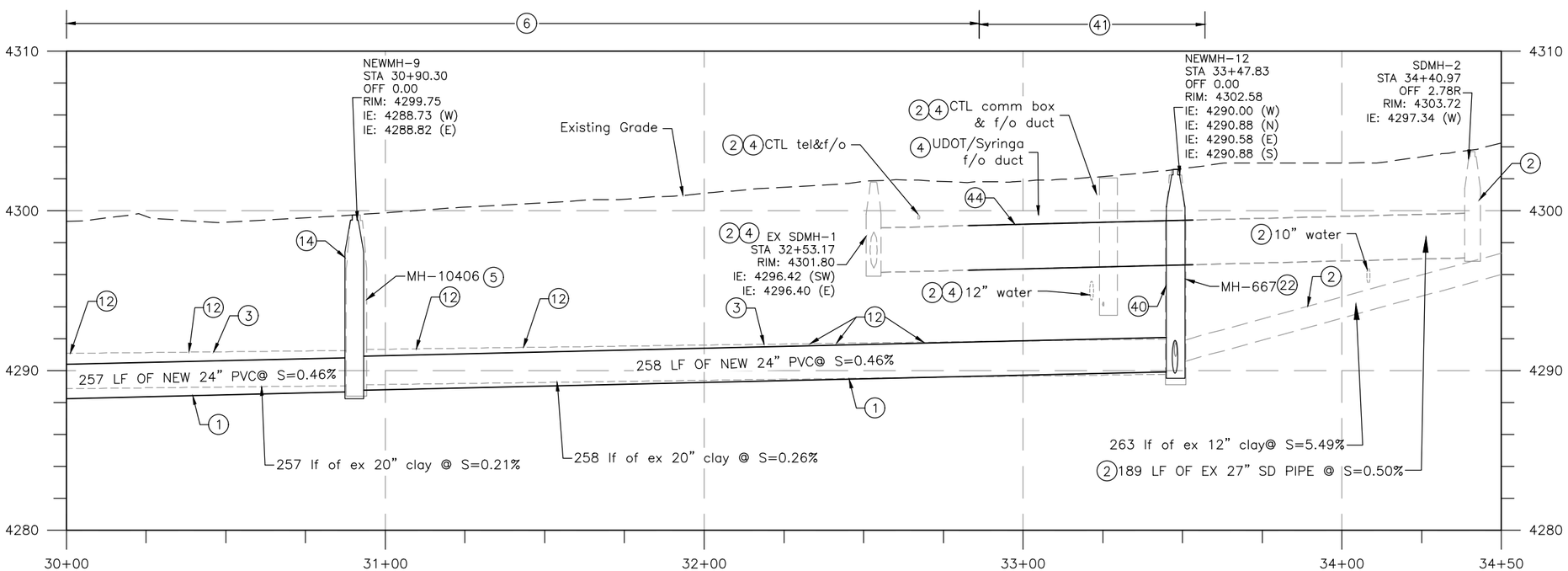

N

10 0 20 40
SCALE IN FEET

SHEET NOTES

1 INSTALL NEW SDR-35 24" PVC SEWER USING OPEN TRENCH METHOD PER OGDEN CITY STANDARD SPECIFICATIONS, SEE DETAIL 6 & 7 ON SHEET DT-5 STA 30+00.00 TO STA 33+47.83

2 PROTECT EXISTING UTILITY IN PLACE OR COORDINATE RELOCATION AS REQUIRED. SEE GENERAL NOTE 5 ON SHEET G-3

3 ABANDON EXISTING 20" AND TRACER PIPES SEWER WITH FLOWABLE FILL

4 LOCATION AND DEPTH OF EXISTING UTILITIES IS APPROXIMATE. CONTRACTOR TO VERIFY. SEE GENERAL NOTE 5 ON SHEET G-3

5 ABANDON EXISTING MANHOLE WITH SAND. SEE DETAIL 5 ON SHEET DT-4

6 PAVEMENT RESTORATION, SEE SHEET DT-2 FOR RESTORATION DETAILS

7 GEOTECHNICAL BORING, SEE BORE HOLE SUMMARY ON SHEET G-5 AND SHEET BL-6
B-6: STA. 30+87.05 LT 6.93'

10 RESET SURVEY MONUMENT AS NEEDED PER OGDEN CITY STANDARDS
MONUMENT ID: 2100S0400E

11 ABANDON EXISTING SEWER STUB AND INACTIVE LATERALS. DO NOT RECONNECT

12 RECONNECT EXISTING SEWER LATERAL TO NEW SEWER MAIN PER OGDEN CITY STANDARD SPECIFICATIONS, SEE DETAIL 3 ON DT-3 AND DETAIL 11 ON DT-7. EXTEND OR TRIM EXISTING SERVICE LINE AS NEEDED. ABANDON THE EXISTING SEWER LATERAL UP TO THE NEW CONNECTION POINT WITH FLOWABLE FILL, SEE GENERAL NOTE 14 ON G-3

14 INSTALL NEW 60" SEWER MANHOLE, SEE DETAIL NO. 1 ON SHEET DT-1

17 PETROLEUM CONTAMINATED SOIL OR GROUNDWATER KNOWN TO EXIST IN THE AREA FROM ABOUT 10-17 FEET BELOW GRADE. CONTACT DERR AT (801)536-4100 PRIOR TO DIGGING WITHIN OR IMMEDIATELY ADJACENT TO THE AREA

22 REMOVE AND DISPOSE OF EXISTING MANHOLE

40 INSTALL NEW 72" SEWER MANHOLE. SEE DETAIL NO. 1 ON SHEET DT-1

41 UDOT ROW. REPLACE FULL CONCRETE PANELS. SEE GENERAL NOTE 24 ON SHEET G-3 AND UDOT STANDARD CONCRETE PAVEMENT DETAIL DRAWINGS ON SHEET PV-1 TO PV-5.

44 REMOVE AND REPLACE EXISTING 27" STORM DRAIN PIPE
STA 32+82.92 RT 6.02' TO
STA 33+53.29 RT 2.84'
SEE DETAIL 4 ON SHEET DT-4 FOR PIPE CONNECTION DETAILS

SUBSURFACE PETROLEUM CONTAMINATED AREA, SEE NOTE 17

APPROXIMATE TRENCH AREA. SEE DETAIL 6 & 7 ON SHEET DT-5

SCALE: 1" = 40'
VERTICAL SCALE: 1" = 8'

VERIFY SCALE
BAR IS ONE-HALF INCH ON ORIGINAL DRAWING

DESIGNED BY: JB
DRAWN BY: BS
CHECKED BY: VBG
APPROVED BY: JB
DATE: March 2024
ENG NO: XXXXXXX
ACCOUNT NO: ----

REVISIONS

NO.	DATE	MADE BY	AUTH. BY

OGDEN CITY
21ST STREET SEWER MAIN UPGRADE

PLAN & PROFILE

Ogden
Salt Lake City
Lehi
Tooele
Vernal

PROFESSIONAL ENGINEER
No. 10496907-2202
JOSEPH CLYDE WILLARDSON
STATE OF UTAH
3-29-24

DRAWING NO.
C-6

SHEET 12 OF 36

P:\West Jordan\2023\Projects\W230903UT.00 - Ogden - 21st Sewer Main Upgrade\03_Design\Sheets\21st Street Sheets - (1).dwg Mar 29, 2024 - 9:50am

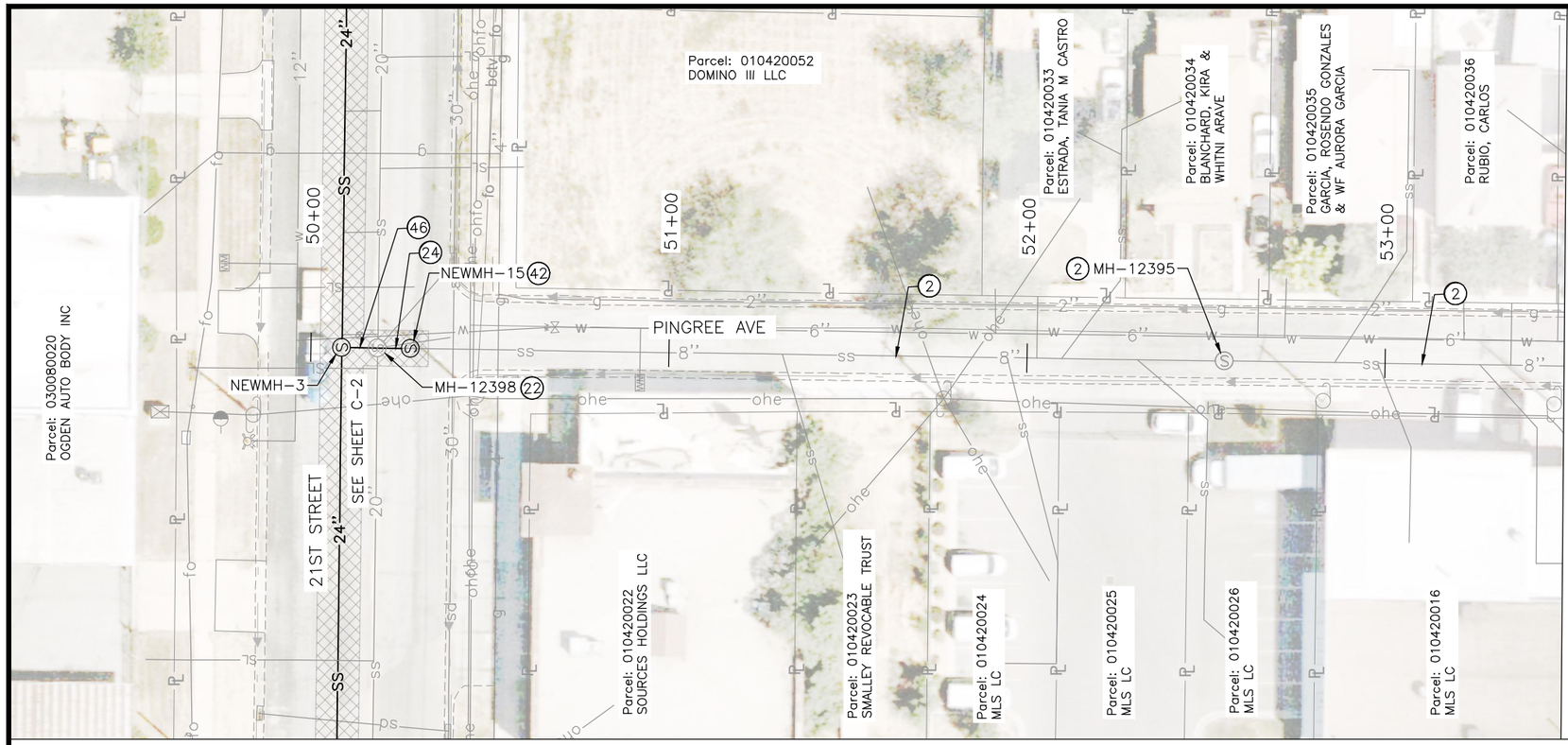

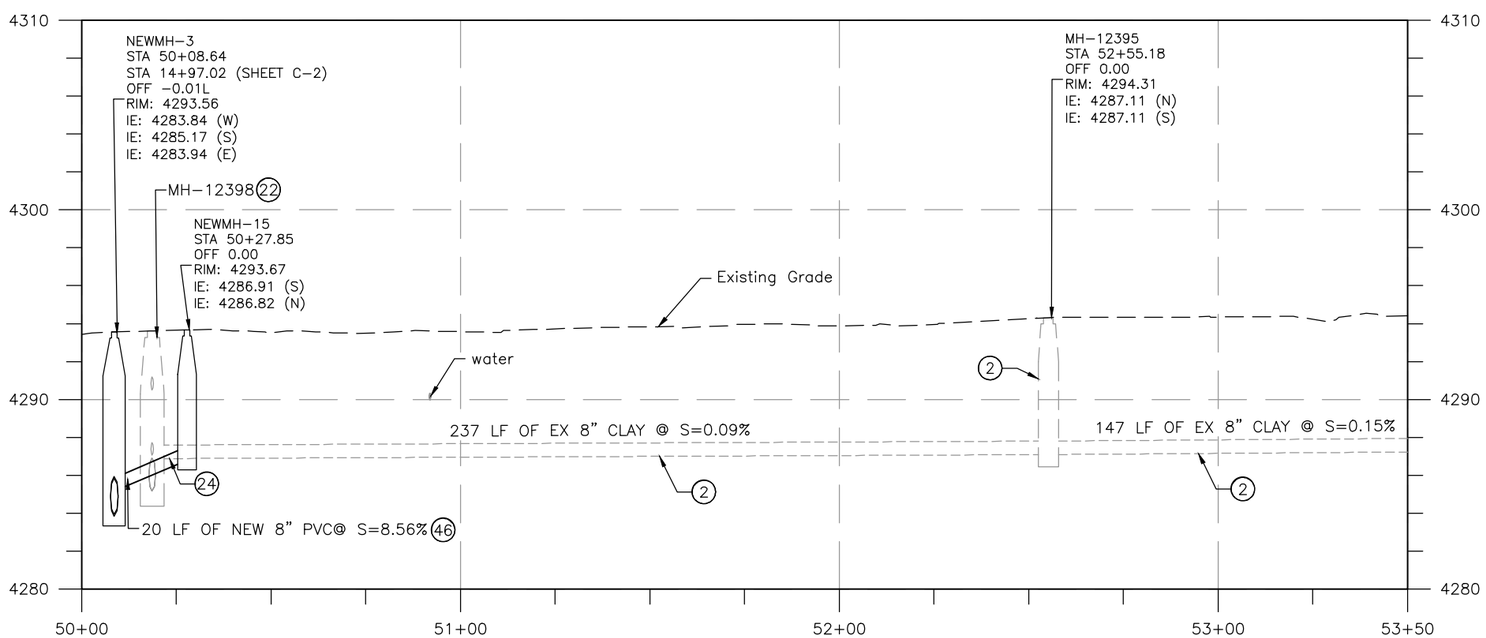

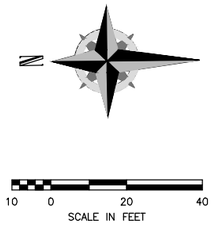

○ SHEET NOTES

2 PROTECT EXISTING UTILITY IN PLACE OR COORDINATE RELOCATION AS REQUIRED. SEE GENERAL NOTE 5 ON SHEET G-3

22 REMOVE AND DISPOSE OF EXISTING MANHOLE

24 REMOVE EXISTING 8" CLAY SEWER STA 50+18.65 TO 50+27.85

42 INSTALL NEW 48" SEWER MANHOLE, SEE DETAIL NO.1 ON SHEET DT-1

46 INSTALL NEW SDR-35 8" PVC SEWER USING OPEN TRENCH METHOD PER OGDEN CITY STANDARD SPECIFICATIONS, SEE DETAIL 6 & 7 ON SHEET DT-5 STA 50+08.64 TO STA 50+27.85

APPROXIMATE TRENCH AREA. SEE DETAIL 6 & 7 ON SHEET DT-5

SCALE: 1" = 40'
VERTICAL SCALE: 1" = 5'

VERIFY SCALE
BAR IS ONE-HALF INCH ON ORIGINAL DRAWING

DESIGNED BY: JB
DRAWN BY: BS
CHECKED BY: VBG
APPROVED BY: JB
DATE: March 2024
EWO NO.: XXXXXXX
ACCOUNT NO.: ----

REVISIONS

NO.	DATE	MADE BY	AUTH. BY

OGDEN CITY
21ST STREET SEWER MAIN UPGRADE

PLAN & PROFILE

DRAWING NO.
C-7

SHEET 13 OF 36

P:\West Jordan\2023\Projects\W230903UT.00 - Ogden - 21st Sewer Main Upgrade\03_Design\Sheets\PLAN AND PROFILE.dwg Mar 29, 2024 - 9:51am

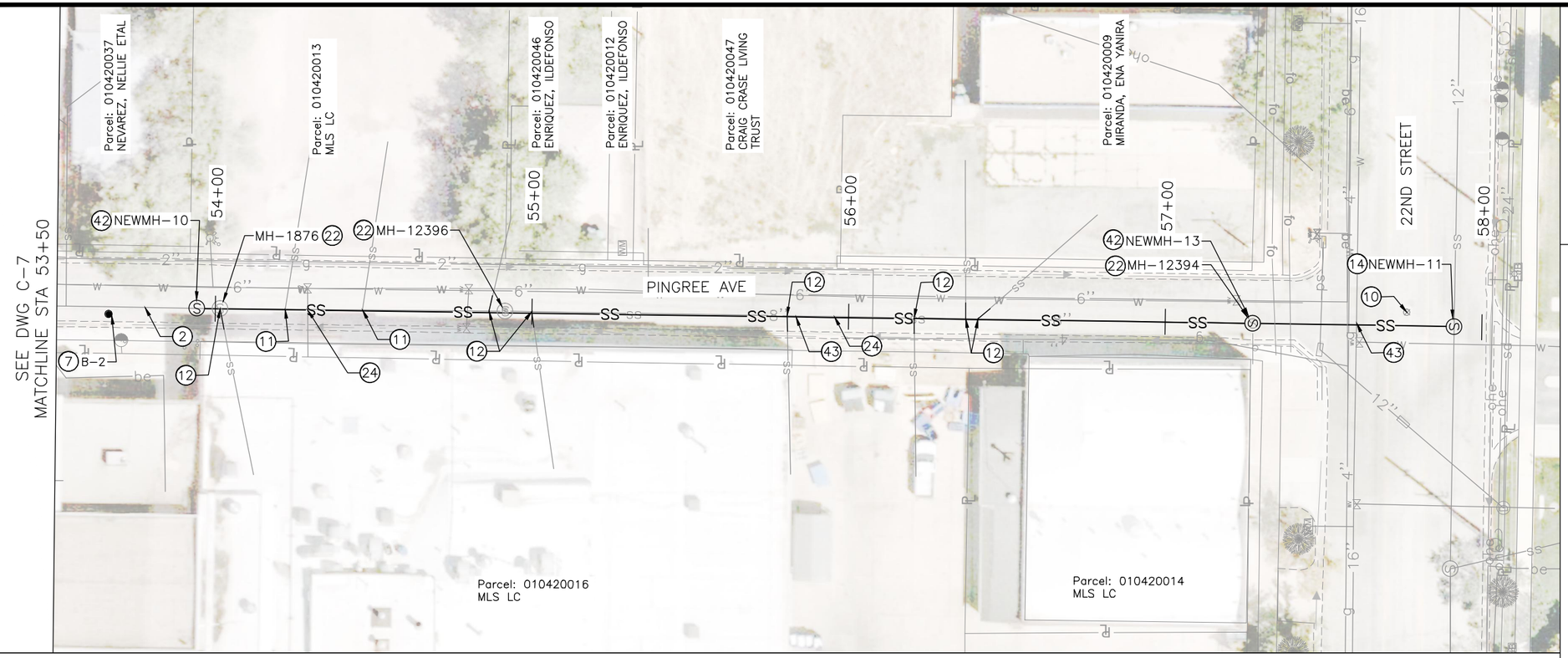

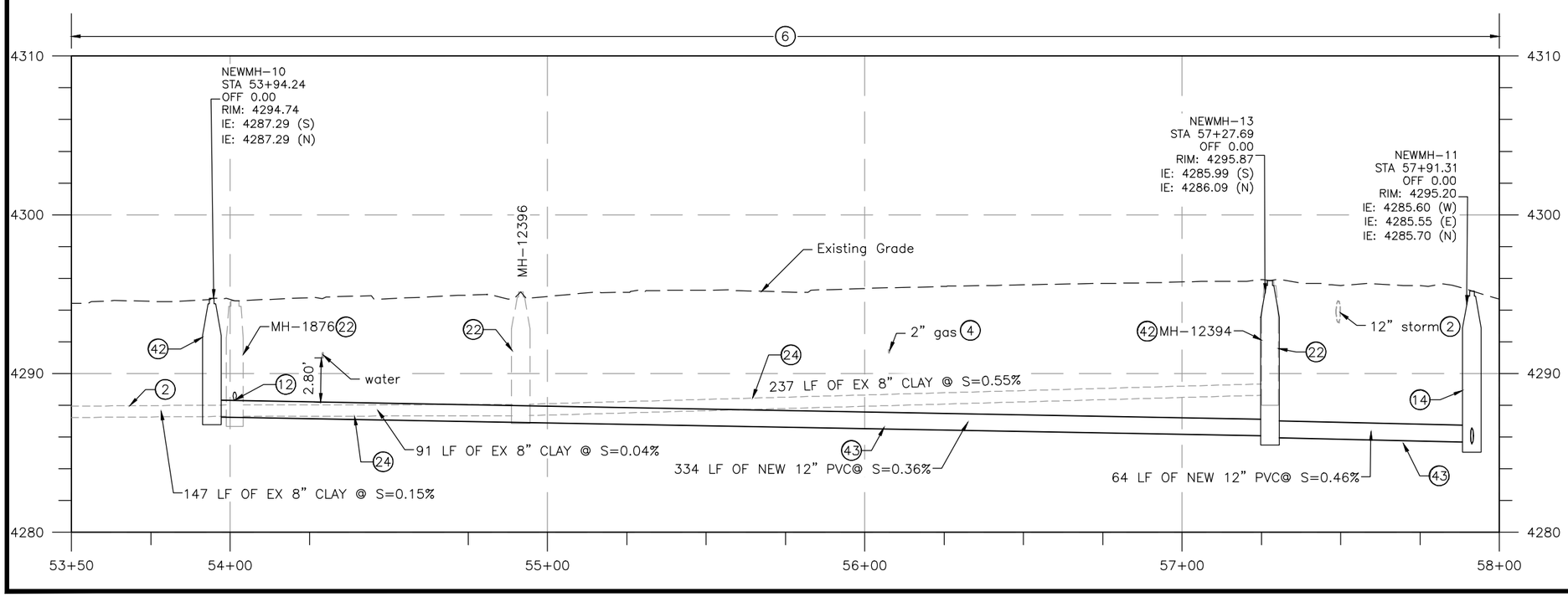

N

10 0 20 40
SCALE IN FEET

SHEET NOTES

2 PROTECT EXISTING UTILITY IN PLACE OR COORDINATE RELOCATION AS REQUIRED. SEE GENERAL NOTE 5 ON SHEET G-3

4 LOCATION AND DEPTH OF EXISTING UTILITIES IS APPROXIMATE. CONTRACTOR TO VERIFY. SEE GENERAL NOTE 5 ON SHEET G-3

6 PAVEMENT RESTORATION, SEE SHEET DT-2 FOR RESTORATION DETAILS

7 GEOTECHNICAL BORING, SEE BORE HOLE SUMMARY ON SHEET G-5 AND SHEET BL-2
B-2: 53+66.41 RT 2.28'

10 RESET SURVEY MONUMENT AS NEEDED PER OGDEN CITY STANDARDS MONUMENT ID: 2200S0150E

11 ABANDON EXISTING SEWER STUB AND INACTIVE LATERALS. DO NOT RECONNECT

12 RECONNECT EXISTING SEWER LATERAL TO NEW SEWER MAIN PER OGDEN CITY STANDARD SPECIFICATIONS, SEE DETAIL 3 ON DT-3 AND DETAIL 11 ON DT-7. EXTEND OR TRIM EXISTING SERVICE LINE AS NEEDED. ABANDON THE EXISTING SEWER LATERAL UP TO THE NEW CONNECTION POINT WITH FLOWABLE FILL, SEE GENERAL NOTE 14 ON G-3

14 INSTALL NEW 60" SEWER MANHOLE, SEE DETAIL NO. 1 ON SHEET DT-1

22 REMOVE AND DISPOSE OF EXISTING MANHOLE

24 REMOVE EXISTING 8" CLAY SEWER

42 INSTALL NEW 48" SEWER MANHOLE. SEE DETAIL NO. 1 ON SHEET DT-1

43 INSTALL NEW SDR-35 12" PVC SEWER USING OPEN TRENCH METHOD PER OGDEN CITY STANDARD SPECIFICATIONS, SEE DETAIL 6 & 7 ON SHEET DT-5
STA 53+94.24 TO STA 57+91.31

APPROXIMATE TRENCH AREA. SEE DETAIL 6 & 7 ON SHEET DT-5

SCALE:
HORIZONTAL SCALE: 1" = 40'
VERTICAL SCALE: 1" = 5'

VERIFY SCALE
BAR IS ONE-HALF INCH ON ORIGINAL DRAWING

DESIGNED BY: JB
DRAWN BY: BS
CHECKED BY: VBG
APPROVED BY: JB
DATE: March 2024
ENG NO: XXXXXXX
ACCOUNT NO: ----

REVISIONS

NO.	DATE	MADE BY	AUTH. BY

OGDEN CITY
21ST STREET SEWER MAIN UPGRADE

PLAN & PROFILE

DRAWING NO.
C-8

SHEET 14 OF 36

P:\West Jordan\2023\Projects\W230903UT.00 - Ogden - 21st Sewer Main Upgrade\03_Design\Sheets\PLAN AND PROFILE.dwg Mar 29, 2024 - 9:52am

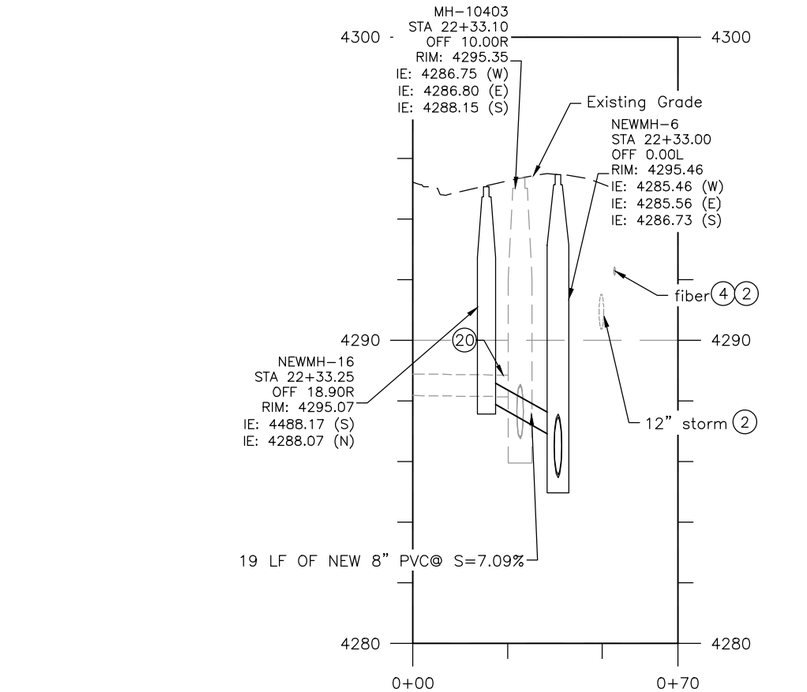

SEWER TIE-IN SECTION
STA 22+33.00

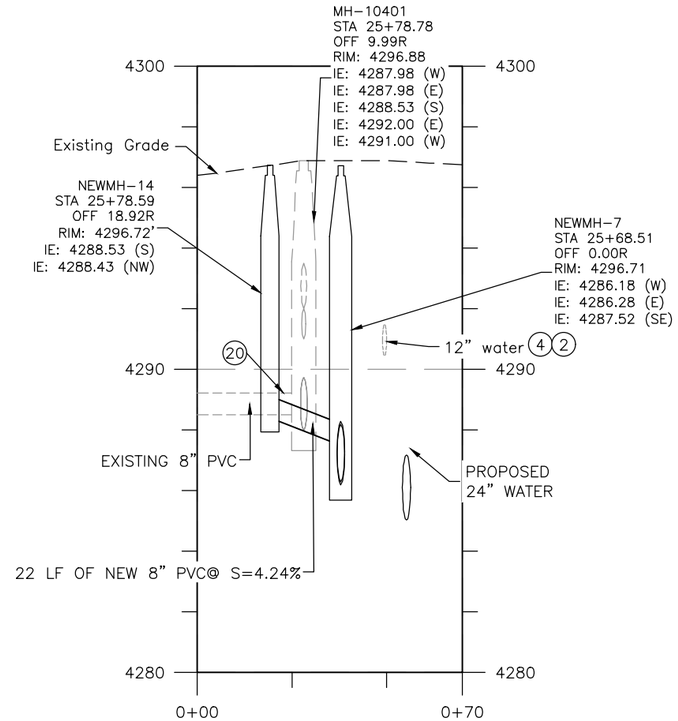

SEWER TIE-IN SECTION
STA 25+79.00

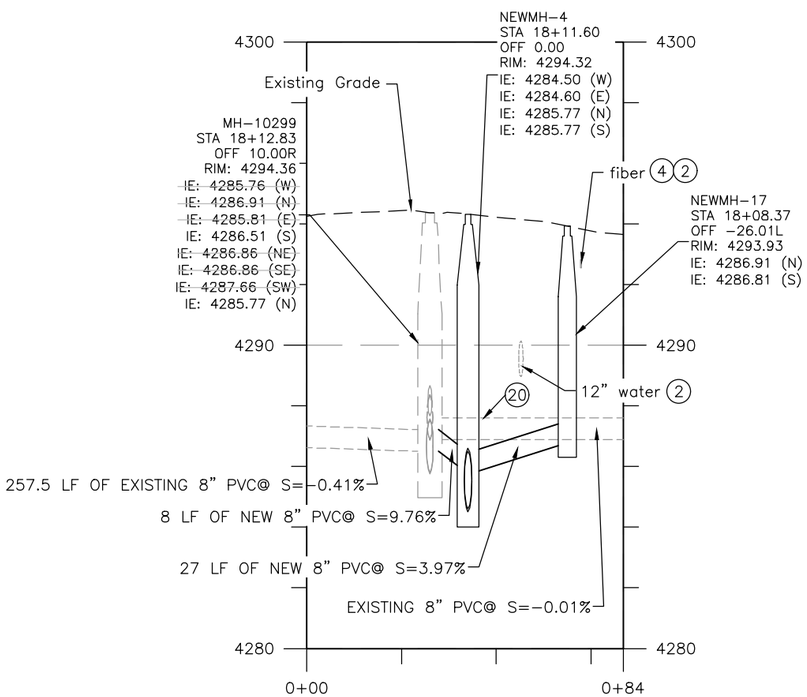

SEWER TIE-IN SECTION
STA 18+11.60

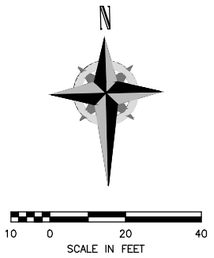

○ SHEET NOTES

2 PROTECT EXISTING UTILITY IN PLACE OR COORDINATE RELOCATION AS REQUIRED. SEE GENERAL NOTE 5 ON SHEET G-3

4 LOCATION AND DEPTH OF EXISTING UTILITIES ARE APPROXIMATE. CONTRACTOR TO VERIFY. SEE GENERAL NOTE 5 ON SHEET G-3

20 REMOVE EXISTING PIPE AS NEEDED. FILL CONNECTION BETWEEN EXISTING 8" PVC AND NEW MANHOLE WITH NON-SHRINK GROUT

21 CONNECT NEW 8" PVC TO EXISTING 8" PVC, SEE DETAIL 4 ON DT-4

SCALE:
HORIZONTAL SCALE: 1" = 40'
VERTICAL SCALE: 1" = 8'

VERIFY SCALE
BAR IS ONE-HALF INCH ON ORIGINAL DRAWING

DESIGNED BY: JB
DRAWN BY: BS
CHECKED BY: VBG
APPROVED BY: JB
DATE: March 2024
ENG NO: XXXXXXX
ACCOUNT NO: ----

REVISIONS

NO.	DATE	MADE BY	AUTH. BY

OGDEN CITY
21ST STREET SEWER MAIN UPGRADE

PROFILE SHEET

DRAWING NO.
C-9

SHEET 15 OF 36

P:\West Jordan\2023\Projects\W230903UT.00 - Ogden - 21st Sewer Main Upgrade\03_Design\Sheets\21st Street Sheets - (1).dwg Mar 29, 2024 - 9:53am

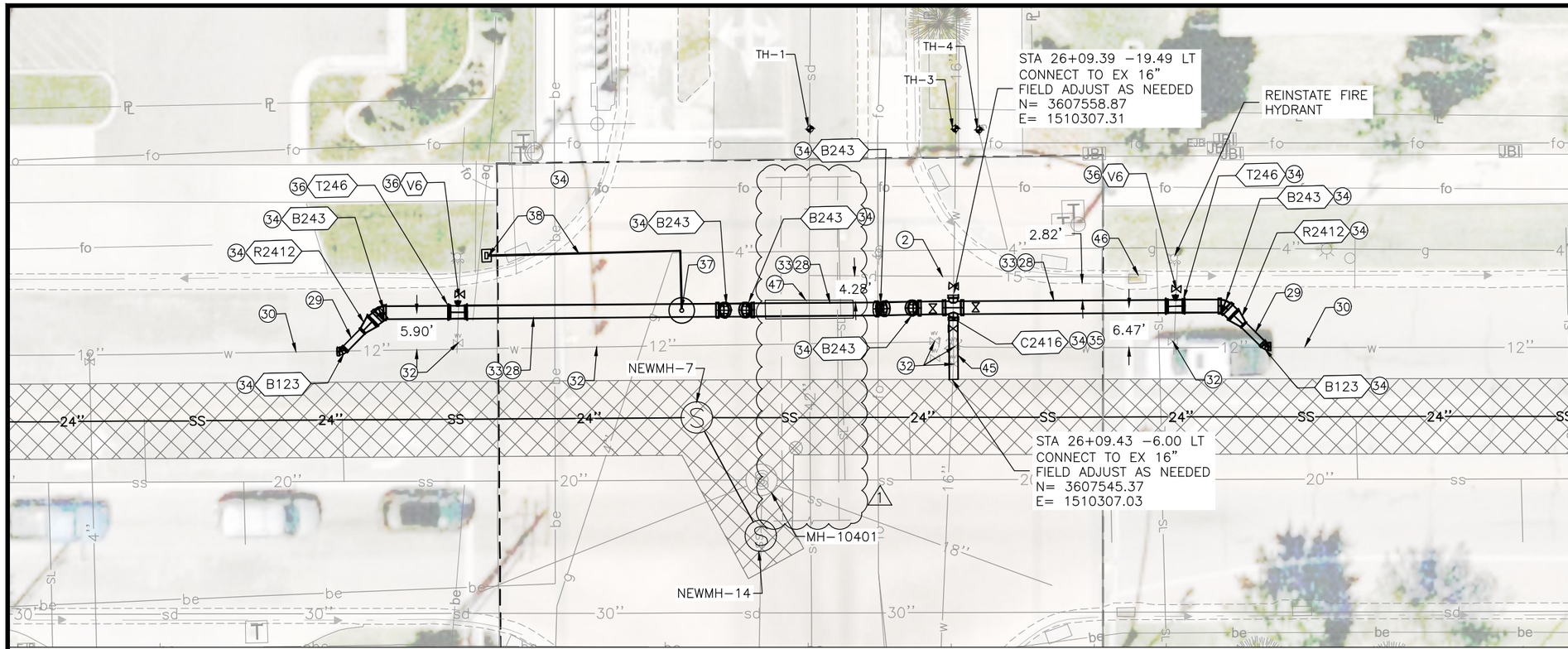

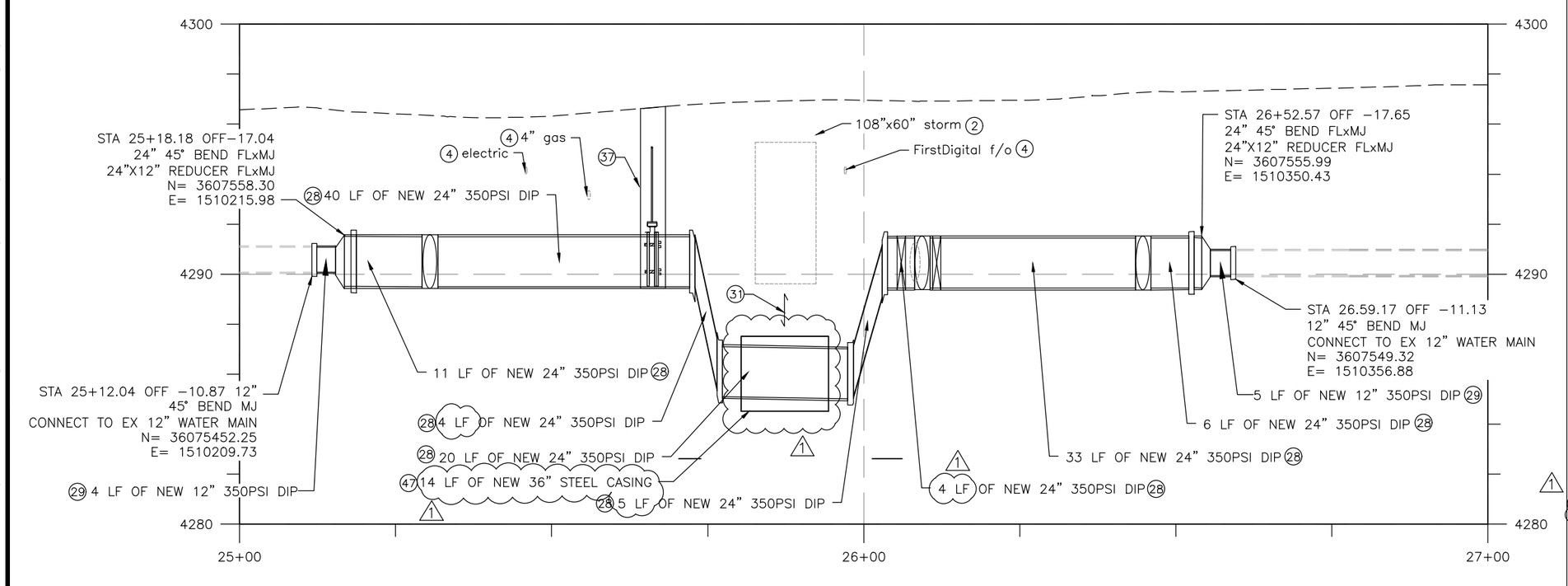

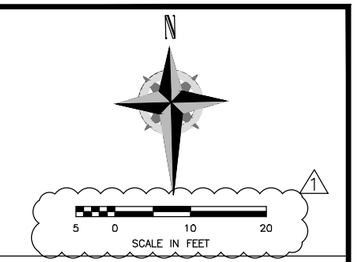

SHEET NOTES

2 PROTECT EXISTING UTILITY IN PLACE OR COORDINATE RELOCATION AS REQUIRED. SEE GENERAL NOTE 5 ON SHEET G-3

4 LOCATION AND DEPTH OF EX UTILITIES IS APPROXIMATE. CONTRACTOR TO VERIFY. SEE GENERAL NOTE 5 ON SHEET G-3

28 INSTALL 24" DI WATER MAIN PRESSURE CLASS 350 WITH A MIN OF 4' OF COVER PER OGDEN CITY STANDARDS
STA 25+18.68 LT 17.04 TO
STA 26+52.07 LT 17.65

29 INSTALL 12" DI WATER MAIN PRESSURE CLASS 350 WITH A MIN OF 4' OF COVER PER OGDEN CITY STANDARDS
STA 25+12.37 LT 11.20 TO
STA 25+18.68 LT 17.04

30 RESTRAIN ALL JOINTS 20' TO THE WEST OF THE 45 DEG BENDS

31 PROVIDE MIN 2' VERTICAL CLEARANCE FROM CULVERT BOTTOM. CONTRACTOR TO PROTECT EXISTING CULVERT IN PLACE BY PROVIDING ADEQUATE SUPPORT DURING INSTALLATION. BACKFILL WITH FLOWABLE FILL

32 CUT, CAP, AND ABANDON EXISTING WATERLINE.
STA 25+11.27 OFF -10.89 TO
STA 26+59.96 OFF -11.14 ;
STA 25+30.31 OFF -10.59 TO
STA 25+30.62 OFF -18.12 ;
STA 26+44.54 OFF -11.01 TO
STA 26+44.51 OFF -18.61
SALVAGE WATER VALVES TO OGDEN WATER DEPARTMENT. SEE GENERAL NOTE 20 ON SHEET G-3

33 ANY PIPE JOINTS ALONG THE NEW 24" NEED TO BE RESTRAINED

34 ALL JOINTS AT VALVES, BENDS, CROSSES, REDUCERS, AND OTHER FITTINGS NEED TO BE FLxMJ RESTRAINED

35 INSTALL (2) NEW 16" BUTTERFLY VALVES N&S) AND (2) NEW 24" BUTTERFLY VALVES (E&W) ON EACH SIDE OF THE 24"X16" CROSS PER OGDEN CITY STANDARDS

36 INSTALL NEW 6" GATE VALVES PER OGDEN CITY STANDARDS

37 INSTALL NEW 2" AIR COMBINATION VALVE WITH 48" MANHOLE. AIR RELEASE VALVE TO BE LOCATED AT THE HIGH POINT IN THE WATER LINE. SEE DETAIL 12 ON DT-8

38 NEW 2" AIR VENT LOCATION. SEE DETAIL 12 ON SHEET DT-8

45 INSTALL 16" DI WATER MAIN PRESSURE CLASS 350 WITH A MIN OF 4' OF COVER PER OGDEN CITY STANDARDS
STA 26+09.40 OFF -15.837 TO
STA 26+09.43 OFF -6.00

46 PROTECT IN PLACE EX INLET BOX. REPLACE CURB AND GUTTER

47 INSTALL 14' OF NEW 36" WELDED STEEL CASING. SEE SHEET DT-9 FOR DETAILS

GENERAL NOTE:

SEE SHEET G-4 FOR FITTING SCHEDULE

APPROXIMATE TRENCH AREA. SEE DETAIL 6 & 7 ON SHEET DT-5

SCALE: 1" = 20'
VERTICAL SCALE: 1" = 5'

VERIFY SCALE
BAR IS ONE-HALF INCH ON ORIGINAL DRAWING

DESIGNED BY: JB
DRAWN BY: BS
CHECKED BY: VBG
APPROVED BY: JB
DATE: March 2024
ENG NO: XXXXXXX
ACCOUNT NO: ----

REVISIONS

NO.	DATE	MADE BY	AUTH. BY
1	3/27	BS	JCW
		ADDED CASING, CHANGED CULVERT WIDTH TO 9', UPDATED SCALE BAR	

OGDEN CITY
21ST STREET SEWER MAIN UPGRADE

WATER LINE DESIGN

Ogden City UTAH Site Development

PROFESSIONAL ENGINEER
No. 9476507-2202
JOSEPH CLYDE WILLARDSON
3-29-24
LICENSED
State of UTAH

DRAWING NO.
W-1

SHEET 16 OF 36

P:\West Jordan\2023\Projects\W230903UT.00 - Ogden - 21st Sewer Main Upgrade\03_Design\Sheets\Waterline Design.dwg Mar 29, 2024 - 9:53am

N

NTS – Scale Varies

○ SHEET NOTES

25. CONTRACTOR TO KEEP SEWER FLOWING IN THE N-S 42" SEWER TRUNKLINE DURING CONSTRUCTION BY INSTALLING NEW DOGHOUSE MH. SEE SHEET C-1 AND DETAIL 8 ON SHEET DT-6
26. EXISTING LAUNDROMAT. BYPASS SEWER FLOWS FROM CLEANOUTS
27. NUISANCE FLOWS AND FLOWS FROM LATERALS WILL NEED TO BE ADDRESSED IN THE BYPASS SUBMITTAL
39. CONTRACTOR MAY USE THE EXISTING 21" CLAY SEWER PIPE FOR BYPASS PURPOSES DURING THE CONSTRUCTION PERIOD
40. CONTRACTOR MAY CHOOSE TO ROUTE THE BYPASS PIPE THROUGH THE EXISTING 27" STORM DRAIN PIPE TO CROSS WASHINGTON BLVD. COORDINATION AND PERMITTING FROM UDOT WILL BE REQUIRED.

GENERAL NOTES

BYPASS ALIGNMENT AND SETUP SHOWN IS PRELIMINARY, CONTRACTOR IS REQUIRED TO DEVELOP INDIVIDUAL AND PROJECT SPECIFIC BYPASS PLANS TO BE REVIEWED AND APPROVED BY THE OWNER PER SPECIFICATION 33 30 00.20

CALL BEFORE YOU DIG.
IT'S FREE AND IT'S THE LAW.
BLUE STAKES OF UTAH
Utility Notification Center, Inc.
1-800-662-4111
www.bluestakes.org
Dig Safely.

SCALE: N/A
VERTICAL SCALE: N/A
VERIFY SCALE
BAR IS ONE-HALF INCH ON ORIGINAL DRAWING

DESIGNED BY: JB
DRAWN BY: BS
CHECKED BY: VBG
APPROVED BY: JB
DATE: March 2024
ENG NO: XXXXXXX
ACCOUNT NO: ------

REVISIONS

NO.	DATE	MADE BY	AUTH. BY

OGDEN CITY
21ST STREET SEWER MAIN UPGRADE
PRELIMINARY BYPASS PLAN

Ogden City Still Unbound

FOR INFORMATION ONLY

DRAWING NO. BP-1

SHEET 17 OF 36

P:\West Jordan\2023\Projects\W230903UT.00 – Ogden – 21st Sewer Main Upgrade\03_Design\Sheets\BypassPlans.dwg Mar 29, 2024 – 9:54am

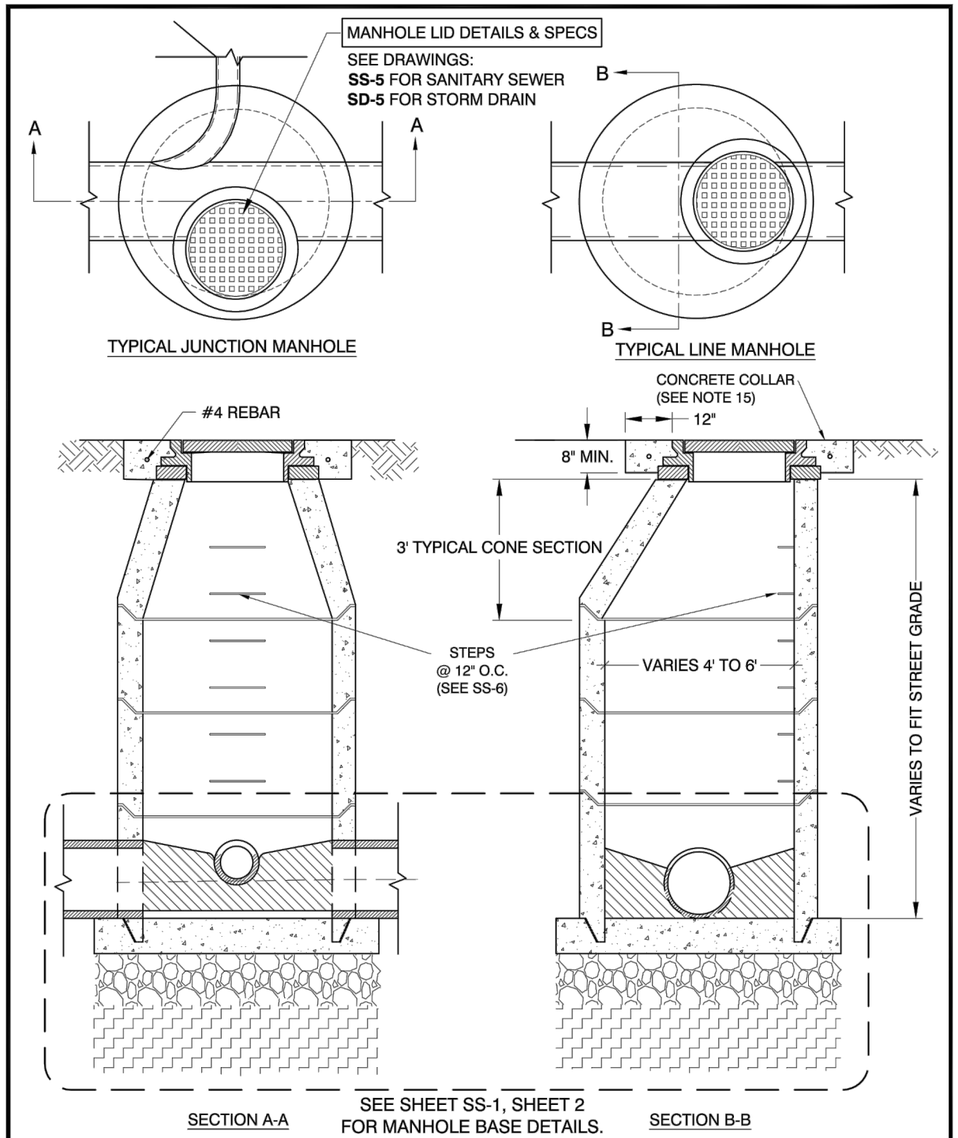

OGDEN CITY ENGINEERING - STANDARD DRAWINGS		
Ogden UTAH Still Untamed™	TYPICAL SEWER MANHOLE	SS-1
	JUSTIN ANDERSON, CITY ENGINEER	SHEET 1 OF 4

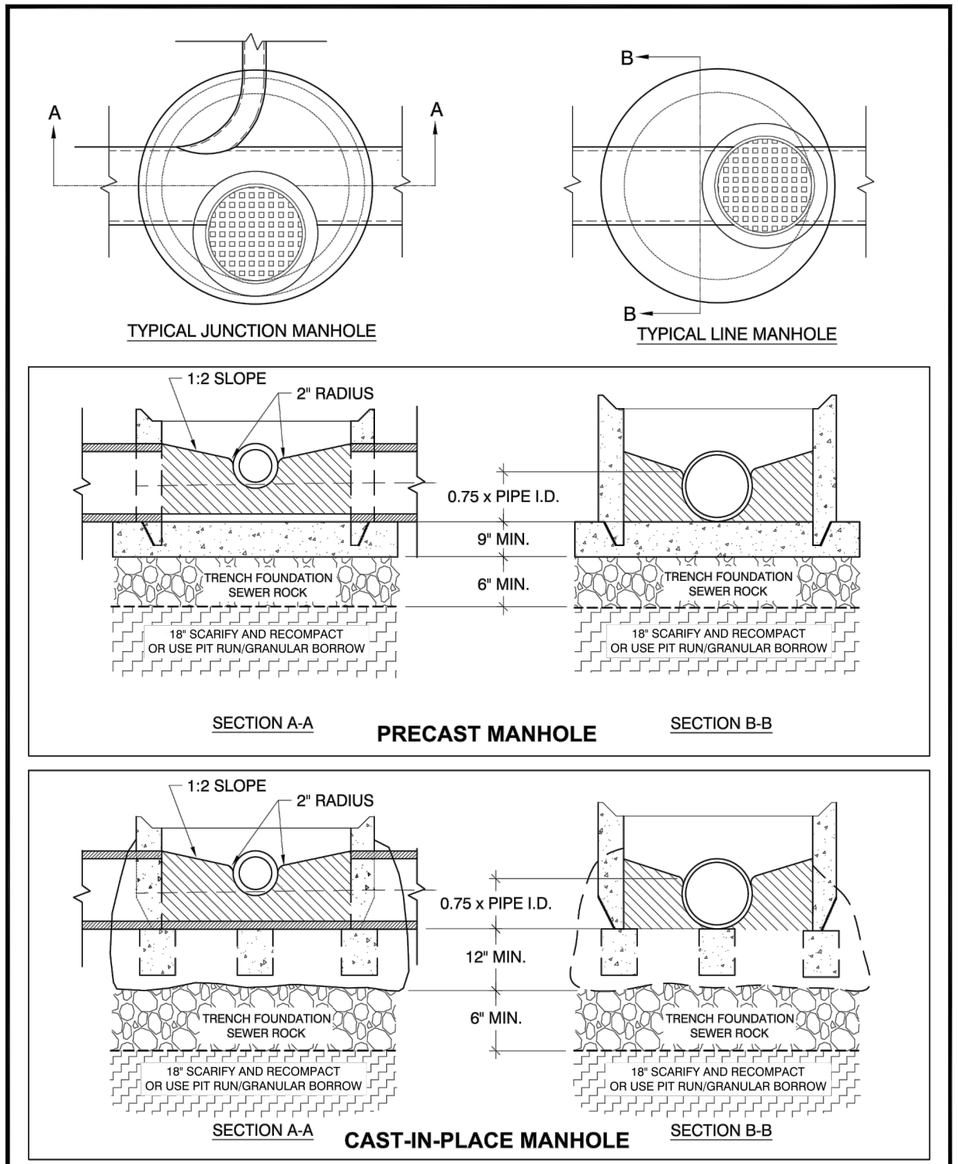

OGDEN CITY ENGINEERING - STANDARD DRAWINGS		
Ogden UTAH Still Untamed™	SEWER MANHOLE BASE DETAILS	SS-1
	JUSTIN ANDERSON, CITY ENGINEER	SHEET 2 OF 4

SEWER MANHOLE DETAILS 1/18
SCALE: NTS

SCALE:
HORIZ. SCALE: N/A
VERTICAL SCALE: N/A
VERIFY SCALE
BAR IS ONE-HALF INCH ON ORIGINAL DRAWING

DESIGNED BY: JGW
DRAWN BY: BS
CHECKED BY: VBG
APPROVED BY: JGW
DATE: March 2024
ENG NO: XXXXXXX
ACCOUNT NO: ----

REVISIONS

NO.	DATE	MADE BY	AUTH. BY

OGDEN CITY
21ST STREET SEWER MAIN UPGRADE
DETAILS

Ogden UTAH Still Untamed™

PROFESSIONAL ENGINEER
5-29-24
No. 9489867-2202
JOSEPH CLYDE WILLARDSON
STATE OF UTAH

DRAWING NO.
DT-1
SHEET 18 OF 36

P:\West Jordan\2023\Projects\W230903UT.00 - Ogden - 21st Sewer Main Upgrade\03_Design\Sheets\Details.dwg Mar 29, 2024 - 9:54am

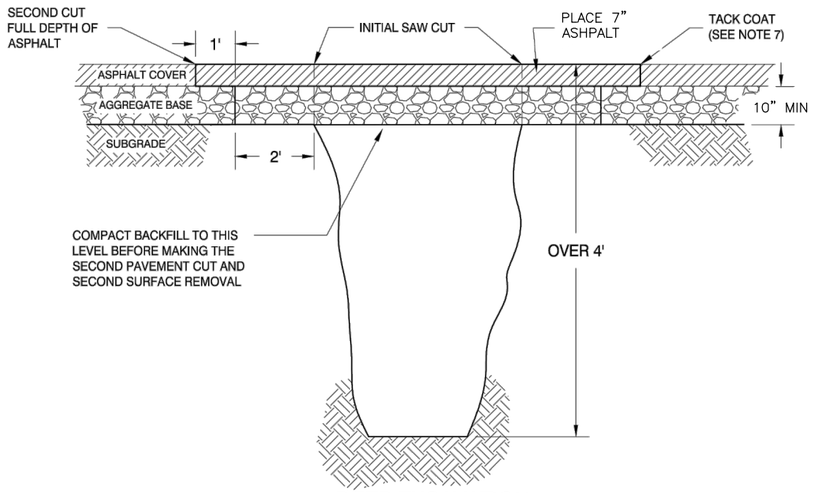

DEEP EXCAVATION

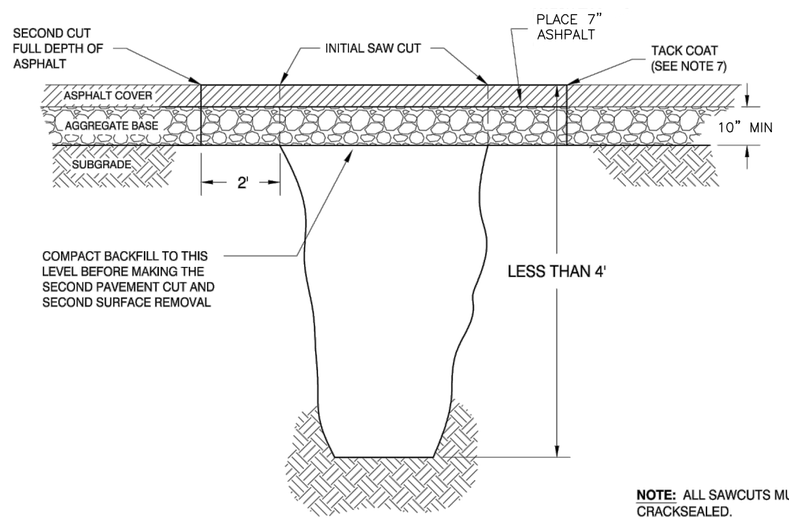

NOTE: ALL SAWCUTS MUST BE CRACKSEALED.

SHALLOW EXCAVATION

NOTES:

1. REMOVE ADDITIONAL PAVEMENT TO THE MENTIONED FEATURE IF IT IS WITHIN TWO FEET OF THE A NEW SAWCUT:
   - 1.1. A PAINTED LINE STRIPE
   - 1.2. A LIP OF GUTTER
   - 1.3. A CURB
   - 1.4. AN EXISTING PAVEMENT PATCH
2. ALL EXCAVATIONS WITHIN THE CITY RIGHT-OF-WAY REQUIRE AN EXCAVATION PERMIT FROM THE OGDEN CITY ENGINEERING DEPARTMENT.
   - 2.1. ALL WORK IN THE RIGHT-OF-WAY MUST BE PERFORMED BY A LICENSED CONTRACTOR FOR THE STATE OF UTAH WHO IS BONDED AND INSURED THROUGH OGDEN CITY.
3. NOTIFY UNDERGROUND SERVICE ALERT (BLUE STAKES) TWO (2) WORKING DAYS PRIOR TO THE START OF EXCAVATION AT 1 (800) 662-4111.
4. NOTIFY ENGINEERING DEPARTMENT ONE (1) WORKING DAY (24 HOURS) PRIOR TO START OF CONSTRUCTION TO ARRANGE INSPECTIONS BY CITY PUBLIC WORKS INSPECTORS.
5. ALL EXCAVATIONS SHALL BE MADE, PROTECTED, AND SUPPORTED AS REQUIRED FOR SAFETY BY OSHA REGULATIONS.
6. BASE COURSE: PROVIDE MATERIAL SPECIFIED IN APWA SECTION 32 11 23.
   - 6.1. PLACE MATERIAL PER APWA SECTION 32 05 10.
   - 6.2. COMPACT THE MATERIAL PER APWA SECTION 31 23 26. THE MINIMUM APPROVED COMPACTION SHALL BE 95 PERCENT OR GREATER. MAXIMUM LIFT THICKNESS BEFORE COMPACTION IS 8" WHEN USING RIDING EQUIPMENT AND 6" WHEN USING HAND HELD COMPACTION EQUIPMENT.
7. TACK COAT PER APWA SECTION 32 12 13.13. PROVIDE FULL TACK COAT COVERAGE ON ALL VERTICAL SURFACES.
   - 7.1. JOINT REPAIR: IF A CRACK OCCURS AT THE PATCH CONNECTION TO THE EXISTING PAVEMENT OR ANY STREET FIXTURE, SEAL THE CRACK PER APWA SECTION 32 01 17.
8. USE PLANT-MIX ASPHALT PAVING AS PER APWA 32 12 16.13 AND THE CURRENT EDITION OF THE OGDEN CITY STANDARDS.
   - 8.1. MATCH EXISTING THICKNESS PLUS ONE (1) INCH, MINIMUM OF FOUR (4) INCHES, BUT NOT TO EXCEED SEVEN (7) INCHES (OR AS SPECIFIED BY THE CITY ENGINEER).
9. REPAIR THE ASPHALT PAVEMENT IF ANY OF THE FOLLOWING CONDITIONS WITHIN THE PATCH OCCUR:
   - 9.1. PAVEMENT SURFACE DISTORTION EXCEEDS 1/4" DEVIATION IN 10'.
   - 9.2. CRACKS AT LEAST 1' IN LENGTH AND 1/4" WIDE OCCURRING MORE OFTEN THAN ONE (1) IN 10 SQUARE FEET.
     - 9.2.1. REPAIR OPTION: CRACK SEAL
   - 9.3. ASPHALT RAVELING IS GREATER THAN ONE (1) SQUARE FOOT PER 100 SQUARE FEET.
     - 9.3.1. REPAIR OPTION: MILL AND INLAY
10. IF CONCRETE IS ENCOUNTERED BELOW ASPHALT, FOLLOW APWA STANDARD PLAN NUMBER 255 FOR COMPOSITE RESTORATION

OGDEN CITY ENGINEERING - STANDARD DRAWINGS		
Ogden UTAH Still Untamed™	**ASPHALT PATCH**	**RD-2**
	JUSTIN ANDERSON, CITY ENGINEER	SHEET 2 OF 2

ASPHALT PATCH DETAILS 2/19
SCALE: NTS

SCALE: HZ: N/A VERTICAL SCALE: N/A
VERIFY SCALE
BAR IS ONE-HALF INCH ON ORIGINAL DRAWING

DESIGNED BY: JGW
DRAWN BY: BS
CHECKED BY: VBG
APPROVED BY: JGW
DATE: March 2024
ENG NO: XXXXXXX
ACCOUNT NO: ----

REVISIONS

NO.	DATE	MADE BY	AUTH. BY

OGDEN CITY
21ST STREET SEWER MAIN UPGRADE
DETAILS

Ogden UTAH Still Untamed™

PROFESSIONAL ENGINEER
No. 9405507-2202
JOSEPH CLYDE WILLARDSON
STATE OF UTAH
3-29-24

DRAWING NO.
DT-2
SHEET 19 OF 36

P:\West Jordan\2023\Projects\W230903UT.00 - Ogden - 21st Sewer Main Upgrade\03_Design\Sheets\Details.dwg Mar 29, 2024 - 9:54am

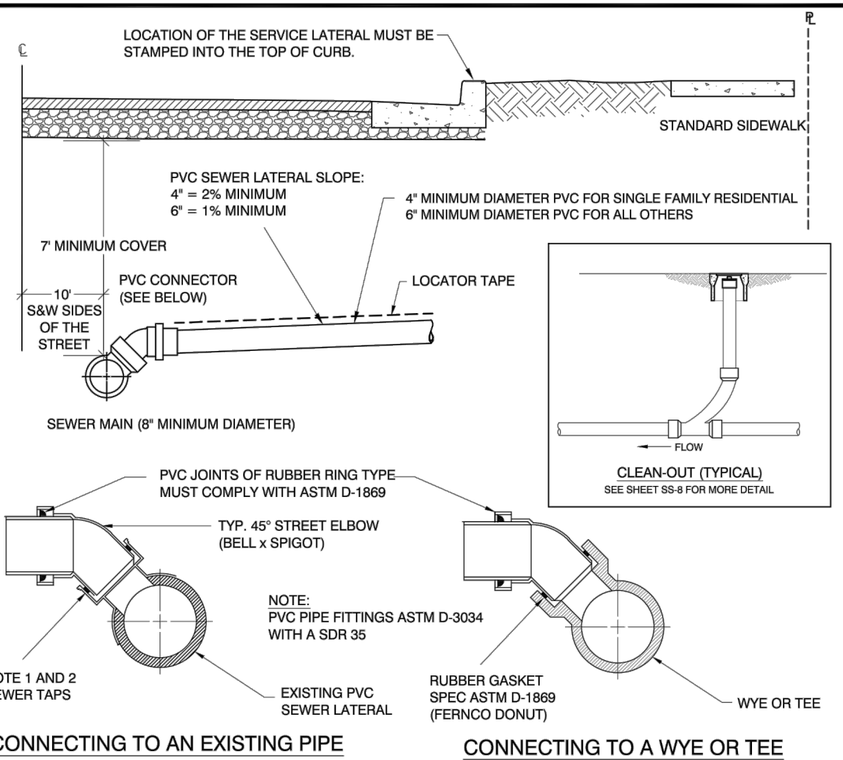

CONNECTING TO AN EXISTING PIPE

CONNECTING TO A WYE OR TEE

NOTES:

1. CONNECTION FEES WILL BE ASSESSED AT THE TIME A PERMIT IS ISSUED. SEWER TAPS WILL BE PERFORMED BY OGDEN CITY PERSONNEL, WYE CONNECTIONS WILL BE PERFORMED BY THE CONTRACTOR UNDER THE SUPERVISION OF AN OGDEN CITY INSPECTOR.
2. SEWER TAPS INTO EXISTING 8" DIAMETER SANITARY SEWER PIPES SHALL NOT BE GREATER THAN 4".
3. ALLOWABLE SANITARY SEWER LATERAL PIPE MATERIAL:
   3.1. PVC SDR-35, GREEN IN COLOR
   3.2. HDPE DR-17
4. REQUIREMENTS FOR THE BEDDING OF A LATERAL IS THE SAME AS SHOWN IN SS-4.
5. THE SEWER LATERAL LOCATIONS SHALL BE MARKED WITH AN "S" IN THE TOP OF THE CONCRETE CURB.
6. PVC JOINTS OF RUBBER RING MUST COMPLY WITH ASTM D-1869.
7. FOR NEW PROJECTS: EXTEND SEWER LATERAL 5' BEHIND THE BACK OF THE SIDEWALK OR PROPERTY LINE, WHICHEVER IS FURTHER. THE END OF A LATERAL SHALL BE MARKED WITH A 2x4, SET IN THE GROUND, AND HAVE THE END COLORED GREEN.
8. CLEANOUTS SHALL BE REQUIRED EVERY 100'.
9. SEWER PIPE SHALL BE MARKED WITH A 6" DETECTABLE GREEN COLORED LOCATOR TAPE LABELED "SANITARY SEWER"

OGDEN CITY ENGINEERING - STANDARD DRAWINGS		
Ogden UTAH Still Untamed	SEWER LATERAL CONNECTION	SS-2
	JUSTIN ANDERSON, CITY ENGINEER	SHEET 1 OF 1

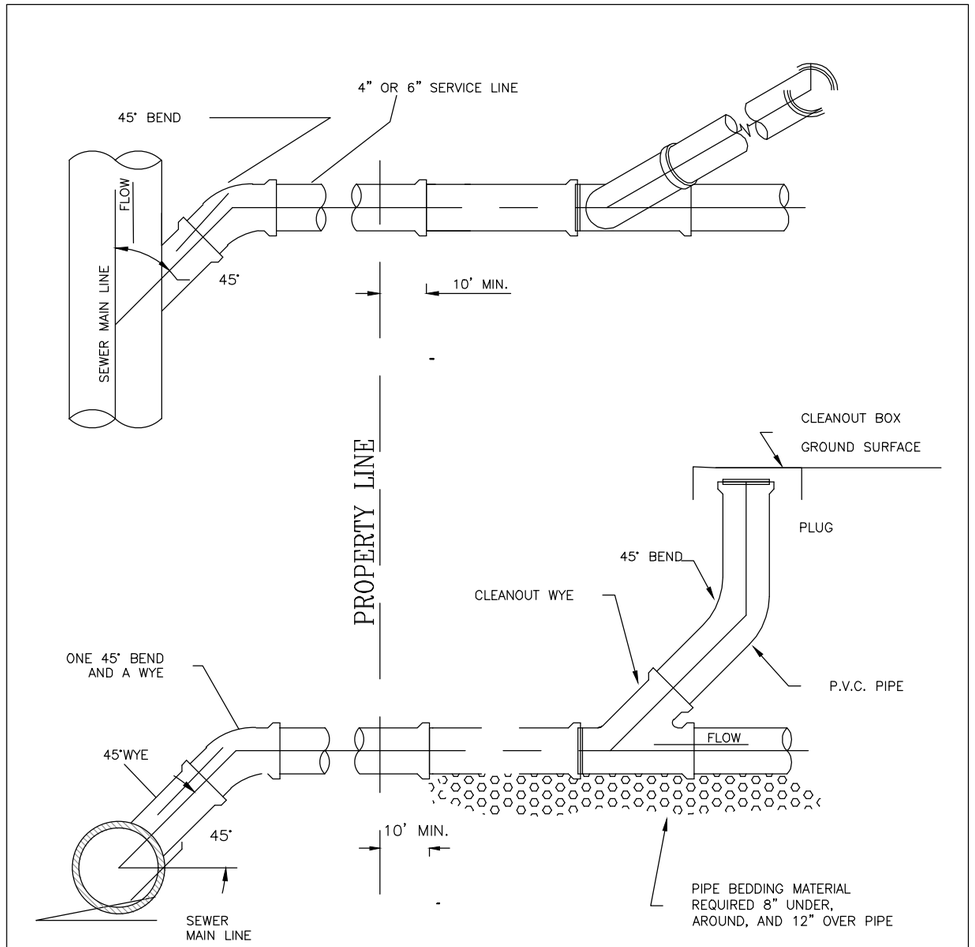

NOTES:

1. ALL SERVICES SHALL BE 4" DIAMETER MINIMUM, AND SHALL BE EXTENDED FROM MAIN LINES TO 10' INSIDE OF PROPERTY LINES, UNLESS DIRECTED OTHERWISE
2. MINIMUM GRADE SHALL BE 1% FOR 6" SERVICE LINES AND 2% FOR 4" SERVICE LINES. MINIMUM GRADE OF 1% CAN BE USED FOR 4" SERVICE LINES WHERE REQUIRED AND AS APPROVED BY THE DISTRICT
3. CLEAN-OUTS SHALL BE INSTALLED EVERY 85 FEET.
4. ALL 90° CONNECTIONS TO MAIN MUST BE CONSTRUCTED WITH ONE 45° BEND AND A WYE.
5. 90° FITTINGS ARE NOT ALLOWED. 90° SHALL BE MADE WITH TWO 45° BENDS OR A COMBO WYE AND 45° BEND.
6. DIRECT NOSE-ON CONNECTIONS ARE USED WHEN CONNECTING TO EXISTING MAIN LINE. ALL NOSE-ON WORK IS TO BE DONE BY DISTRICT PERSONNEL.

SEWER SERVICE CONNECTION 3/20
SCALE: NTS

SCALE: HOR. N/A VERTICAL SCALE: N/A
VERIFY SCALE
BAR IS ONE-HALF INCH ON ORIGINAL DRAWING

DESIGNED BY: JGW
DRAWN BY: BS
CHECKED BY: VBG
APPROVED BY: JGW
DATE: March 2024
ENG NO.: XXXXXXX
ACCOUNT NO.: ----

REVISIONS

NO.	DATE	MADE BY	AUTH. BY

OGDEN CITY
21ST STREET SEWER MAIN UPGRADE
DETAILS

Ogden UTAH Still Untamed

PROFESSIONAL ENGINEER No. 7040667-2202 JOSEPH CLYDE WILLIAMSON STATE OF UTAH
3-29-24

DRAWING NO. DT-3
SHEET 20 OF 36

P:\West Jordan\2023\Projects\W23090JUT.00 - Ogden - 21st Sewer Main Upgrade\03_Design\Sheets\Details.dwg Mar 29, 2024 - 9:54am

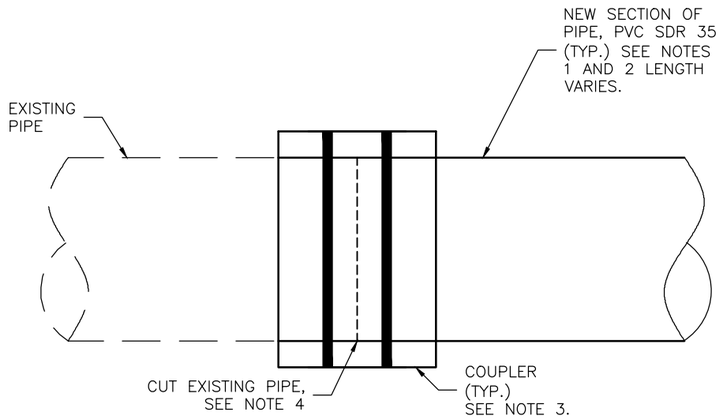

NOTES:

1. NEW PIPE SHALL HAVE PIPE BEDDING PER APWA PLAN NO. 382.
2. NEW PIPE SHALL BE INSTALLED TO MATCH EXISTING GRADE.
3. CONNECTION TO EXISTING SHALL BE THROUGH THE INSTALLATION OF FLEXIBLE COUPLERS. WHERE POSSIBLE, COUPLERS SHALL HAVE A STAINLESS STEEL SHEER BAND, TO PREVENT DIFFERENTIAL SETTLEMENT BETWEEN THE NEW AND EXISTING PIPES.
4. CUT EXISTING PIPE IN A NEAT STRAIGHT LINE. BREAKING THE PIPE WILL NOT BE ALLOWED.
5. EXISTING PIPE SECTIONS TO BE REMOVED SHALL BE REMOVED FROM THE SITE AND DISPOSED OF AT THE CONTRACTOR'S EXPENSE. PIPE SECTIONS OR CRUSHED PIPE SHALL NOT BE USED OR ALLOWED TO REMAIN IN BACKFILL.

SEWER CONNECTION DETAIL 4/21
SCALE: NTS

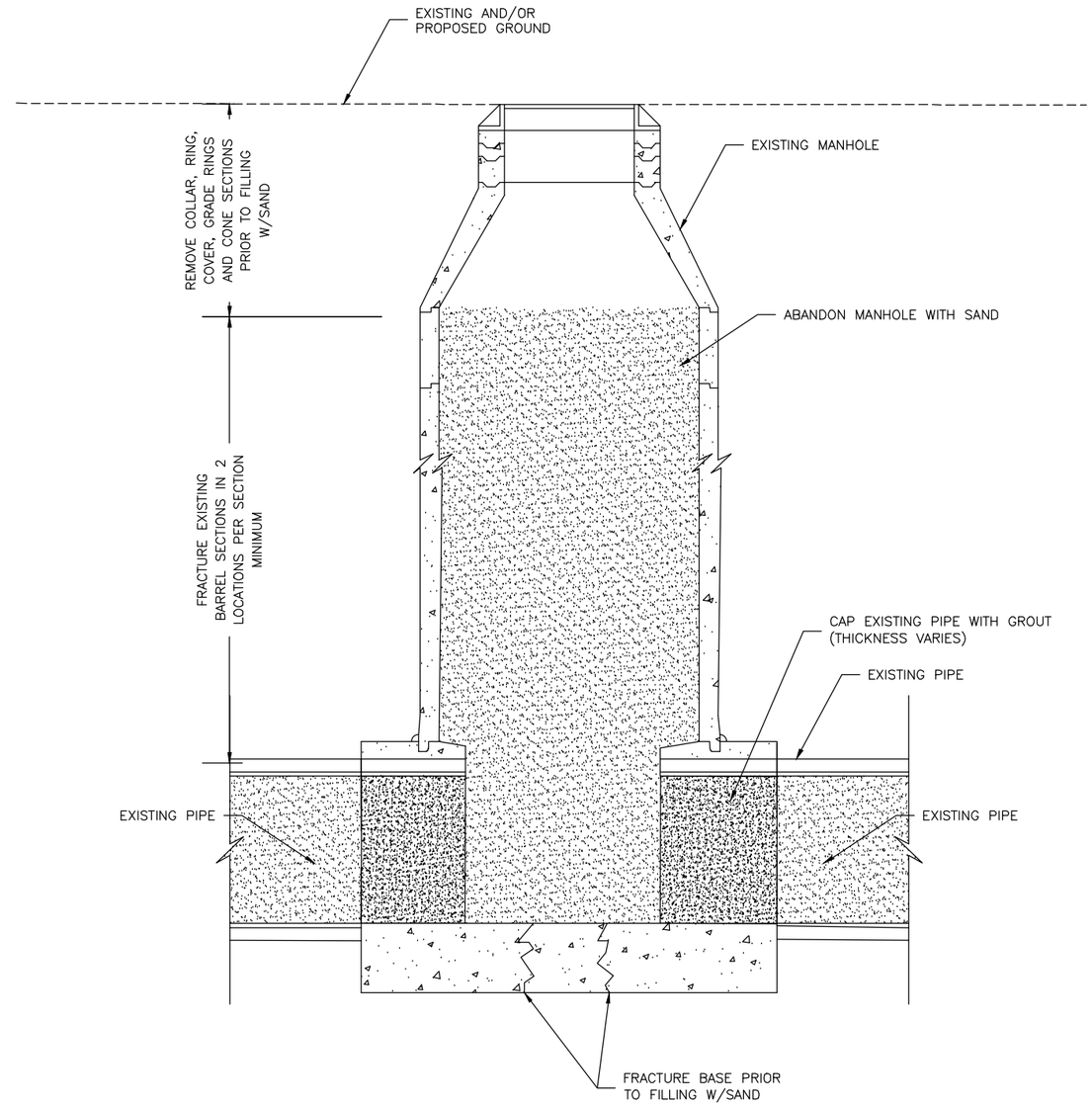

ABANDON MANHOLE DETAIL 5/21
SCALE: NTS

SCALE: HORIZONTAL: N/A VERTICAL SCALE: N/A
VERIFY SCALE
BAR IS ONE-HALF INCH ON ORIGINAL DRAWING

DESIGNED BY: JGW
DRAWN BY: BS
CHECKED BY: VBG
APPROVED BY: JGW
DATE: March 2024
ENG NO: XXXXXXX
ACCOUNT NO: ----

REVISIONS

NO.	DATE		MADE BY	AUTH. BY

OGDEN CITY
21ST STREET SEWER MAIN UPGRADE
DETAILS

DRAWING NO. DT-4
SHEET 21 OF 36

P:\West Jordan\2023\Projects\W230903UT.00 - Ogden - 21st Sewer Main Upgrade\03_Design\Sheets\Details.dwg Mar 29, 2024 - 9:54am

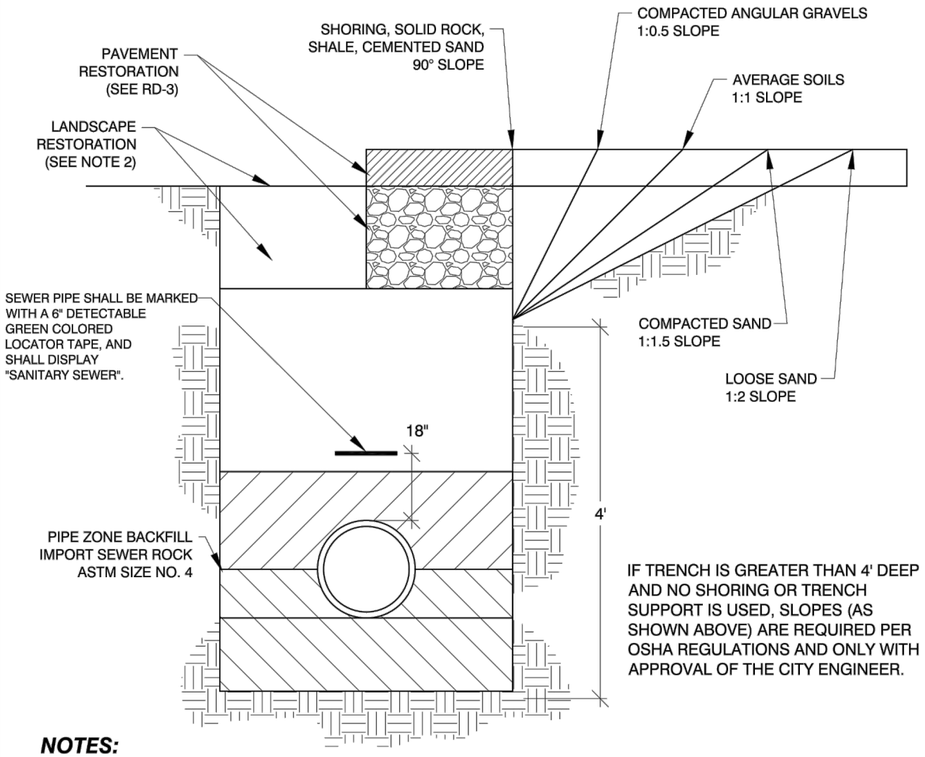

IF TRENCH IS GREATER THAN 4' DEEP AND NO SHORING OR TRENCH SUPPORT IS USED, SLOPES (AS SHOWN ABOVE) ARE REQUIRED PER OSHA REGULATIONS AND ONLY WITH APPROVAL OF THE CITY ENGINEER.

NOTES:

1. BACKFILL: ABOVE THE PIPE ZONE.
   1.1. GRANULAR FILL: PLACE FILL PER APWA SECTION 33 05 20.
   1.2. COMPACT PER APWA SECTION 31 23 26 TO A STANDARD PROCTOR DENSITY OF 95 PERCENT OR GREATER. MAXIMUM LIFT THICKNESS BEFORE COMPACTION IS 8" WHEN USING RIDING AND 6" WHEN USING HAND COMPACTION EQUIPMENT.
2. LANDSCAPE RESTORATION: LANDSCAPE MUST BE RETURNED TO PRE-CONSTRUCTION CONDITIONS OR BETTER.
3. PAVEMENT RESTORATION: DO NOT INSTALL ANY PORTION OF ASPHALT OR CONCRETE SURFACING UNTIL TRENCH COMPACTION IS ACCEPTABLE TO THE ENGINEER.
4. PEA GRAVEL IS NOT ALLOWED IN ANY PART OF THE TRENCH.
5. STANDARD SEWER MAIN ALIGNMENT SHALL BE 10' WEST OR 10' SOUTH OF THE CENTERLINE IN THE PUBLIC RIGHT-OF-WAY (SEE RD-1).
6. HORIZONTAL CLEARANCE TO ANY WATER MAIN SHALL BE AT LEAST 10' (REFER TO UTAH ADMINISTRATIVE CODE # R309-550).
7. COMPACTION TESTS ARE REQUIRED EVERY 200 LINEAR FEET OF A MAIN INSTALLATION PER APWA SECTION 33 05 20. COMPACTION TESTS ARE REQUIRED AT HALF AND FULL DEPTHS.

OGDEN CITY ENGINEERING - STANDARD DRAWINGS		
Ogden UTAH Still Untamed™	**SEWER PIPE TRENCH**	**SS-3**
	JUSTIN ANDERSON, CITY ENGINEER	SHEET 1 OF 1

SEWER PIPE TRENCH 6/22
SCALE: NTS

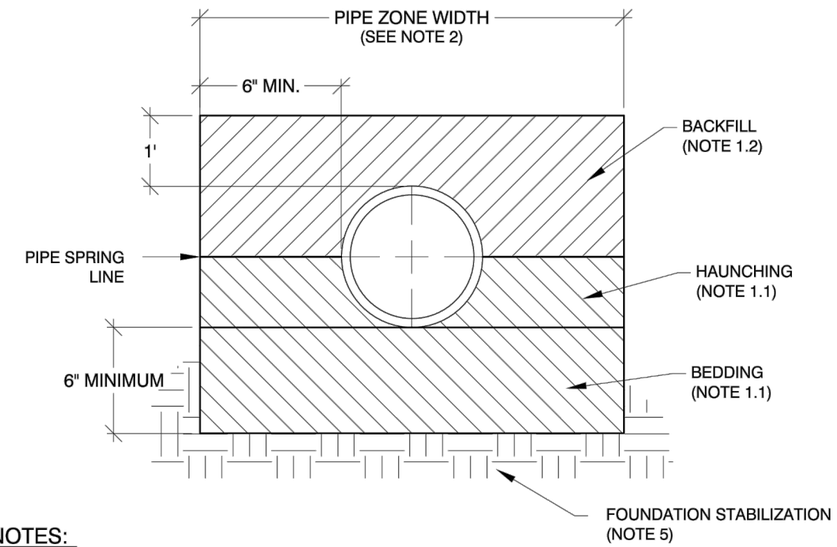

NOTES:

1. DO NOT USE RECYCLED RAP AGGREGATE IN THE PIPE ZONE WITHOUT THE APPROVAL OF THE CITY ENGINEER. IF MANUFACTURE RECOMMENDS ANYTHING CONTRARY TO WHAT IS LISTED BELOW, CONSULT WITH THE ENGINEERING DEPARTMENT.
   1.1. HAUNCHING/BEDDING: INSTALL AND COMPACT PER MANUFACTURER RECOMMENDATIONS AND ASTM SPECIFICATIONS. IMPORT SEWER ROCK ASTM SIZE NO. 4
      1.1.1. WATER JETTING IS NOT ALLOWED.
      1.1.2. SUBMISSION OF COMPACTION TEST DATA FOR THE HAUNCHING AREAS MAY BE REQUESTED AT ANY TIME.
   1.2. BACKFILL: INSTALL AND COMPACT PER MANUFACTURER RECOMMENDATIONS AND ASTM SPECIFICATIONS. DO NOT PLACE IN LIFTS GREATER THAN 8" BEFORE COMPACTION. IMPORT SEWER ROCK ASTM SIZE NO. 4
      1.2.1. COMPACT PER APWA SECTION 31 23 26 TO A DENSITY OF 95 PERCENT OR GREATER. MAXIMUM LIFT THICKNESS BEFORE COMPACTION IS 8" WHEN USING RIDING AND 6" WHEN USING HAND COMPACTION EQUIPMENT.
2. PIPE ZONE WIDTH IS RECOMMENDED BY THE MANUFACTURE OF THE PIPE. WIDTH OF PIPE ZONE IS MEASURED AT THE PIPE SPRING LINE AND INCLUDES ANY NECESSARY SHEATHING. FOLLOW MANUFACTURE RECOMMENDATIONS FOR ANY TRENCH BOX APPLICATIONS.
3. INSTALL THE PIPE IN THE CENTER OF THE TRENCH. THE EDGE OF THE PIPE WALL SHALL BE A MINIMUM DISTANCE OF 6" FROM THE TRENCH WALL.
4. PEA GRAVEL IS NOT ALLOWED IN ANY PART OF THE PIPE ZONE.
5. FOUNDATION STABILIZATION REQUIRES SEWER ROCK PER APWA SECTION 31 05 13.
   5.1. INSTALLATION OF STABILIZATION-SEPARATION GEOTEXTILE PER APWA SECTION 31 05 19 WILL BE REQUIRED TO SEPARATE BACKFILL MATERIAL AND NATIVE SUBGRADE MATERIAL IF SEWER ROCK CANNOT PROVIDE A WORKING SURFACE OR PREVENT SOIL MIGRATION.
6. REFER TO APWA SECTION 33 05 07 FOR ADDITIONAL INFORMATION ON PVC PIPE.

OGDEN CITY ENGINEERING - STANDARD DRAWINGS		
Ogden UTAH Still Untamed™	**SEWER MAIN PIPE ZONE**	**SS-4**
	JUSTIN ANDERSON, CITY ENGINEER	SHEET 1 OF 1

SEWER PIPE ZONE 7/22
SCALE: NTS

SCALE: HORIZ. N/A VERTICAL SCALE: N/A
VERIFY SCALE
BAR IS ONE-HALF INCH ON ORIGINAL DRAWING

DESIGNED BY: JGW
DRAWN BY: BS
CHECKED BY: VBG
APPROVED BY: JGW
DATE: March 2024
ENG NO: XXXXXXX
ACCOUNT NO: ----

REVISIONS

NO.	DATE	MADE BY	AUTH. BY

OGDEN CITY
21ST STREET SEWER MAIN UPGRADE
DETAILS

Ogden UTAH Still Untamed™

PROFESSIONAL ENGINEER STATE OF UTAH No. 10405607-2202 JOSEPH G. TYE WILLIAMSON 3-29-24

DRAWING NO. DT-5
SHEET 22 OF 36

P:\West Jordan\2023\Projects\W23090JUT.00 - Ogden - 21st Sewer Main Upgrade\03_Design\Sheets\Details.dwg Mar 29, 2024 - 9:55am

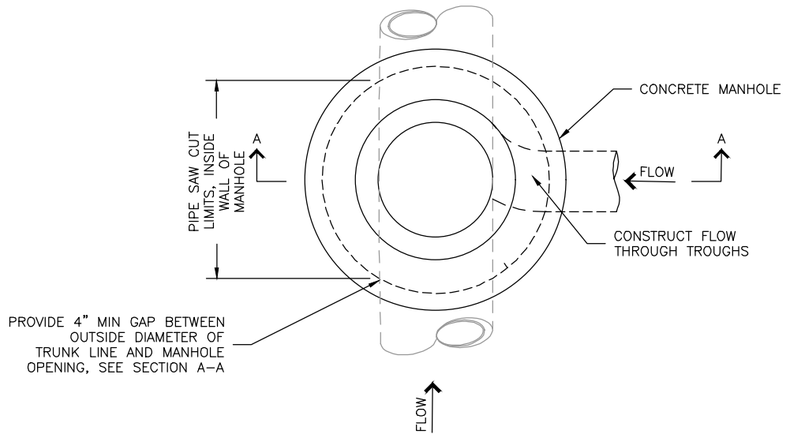

PLAN

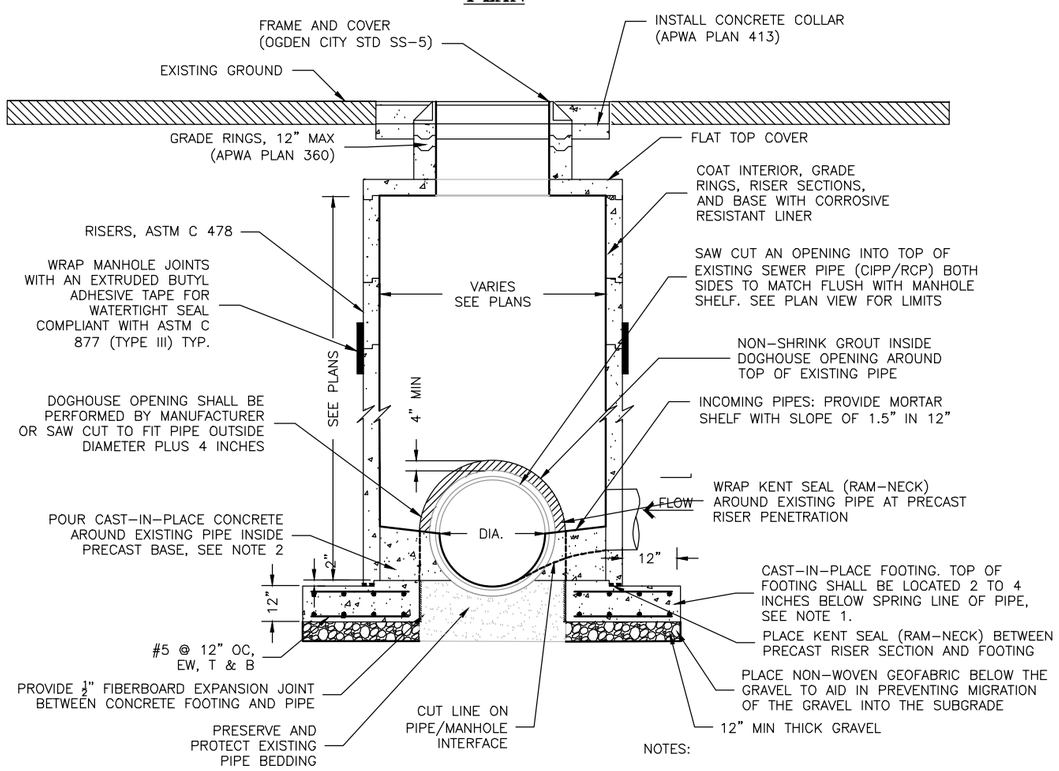

SECTION A–A

NOTES:

1. CONCRETE FOR BASE SLAB SHALL HAVE A MINIMUM COMPRESSIVE STRENGTH OF 4,000 PSI AT 28 DAYS.
2. GROUT INSIDE OF MANHOLE USED AS FILL TO CREATE SLOPE TO PIPE SHALL HAVE A MINIMUM COMPRESSIVE STRENGTH OF 3000 PSI AT 28 DAYS.

DOGHOUSE MANHOLE DETAIL 8/23
SCALE: NTS

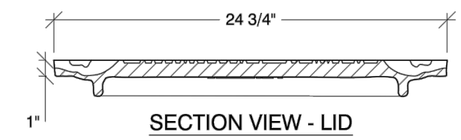

SECTION VIEW - LID

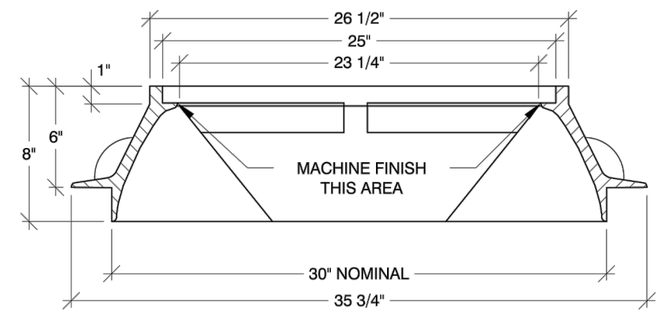

SECTION VIEW - FRAME

NOTES:

1. CONTACT THE OGDEN CITY SEWER DEPARTMENT FOR DETAILS AND ORDERING INFORMATION FOR SEWER LID AND FRAME (801) 629-8331 OR (801) 629-8282.
2. LOW PROFILE LIDS WILL NOT BE ALLOWED IN ANY OGDEN CITY RIGHT OF WAY.
3. CASTINGS: GREY IRON CLASS 35 MINIMUM PER ASTM A 48.
4. COATINGS:EXCEPT MACHINED SURFACES, COAT ALL METAL PARTS
5. HEAT NUMBER: PLACE FOUNDRY AND HEAT NUMBER ON THE INSIDE OF THE FRAME AND ON THE BOTTOM OF THE COVER.
6. SEE SS-1, FOR SEWER MANHOLE DETAILS

OGDEN CITY ENGINEERING - STANDARD DRAWINGS		
Ogden UTAH Still Untamed™	SEWER MANHOLE LID AND FRAME	SS-5
	JUSTIN ANDERSON, CITY ENGINEER	SHEET 1 OF 1

SEWER MANHOLE LID AND FRAME 9/23
SCALE: NTS

SCALE: N/A

VERIFY SCALE
BAR IS ONE–HALF INCH ON ORIGINAL DRAWING

DESIGNED BY: JB
DRAWN BY: BS
CHECKED BY: VBG
APPROVED BY: JB
DATE: March 2024
ENG NO: XXXXXXX
ACCOUNT NO: ----

REVISIONS

NO.	DATE	MADE BY	AUTH. BY

OGDEN CITY
21ST STREET SEWER MAIN UPGRADE
DETAILS

Ogden UTAH Still Untamed™

PROFESSIONAL ENGINEER No. 10460960-2202 JOSEPH CLYDE WILLIAMSON STATE OF UTAH 3-29-24

DRAWING NO.
DT–6
SHEET 23 OF 36

P:\West Jordan\2023\Projects\W230903UT.00 – Ogden – 21st Sewer Main Upgrade\03_Design\Sheets\DT_DoghouseMH.dwg Mar 29, 2024 – 9:55am

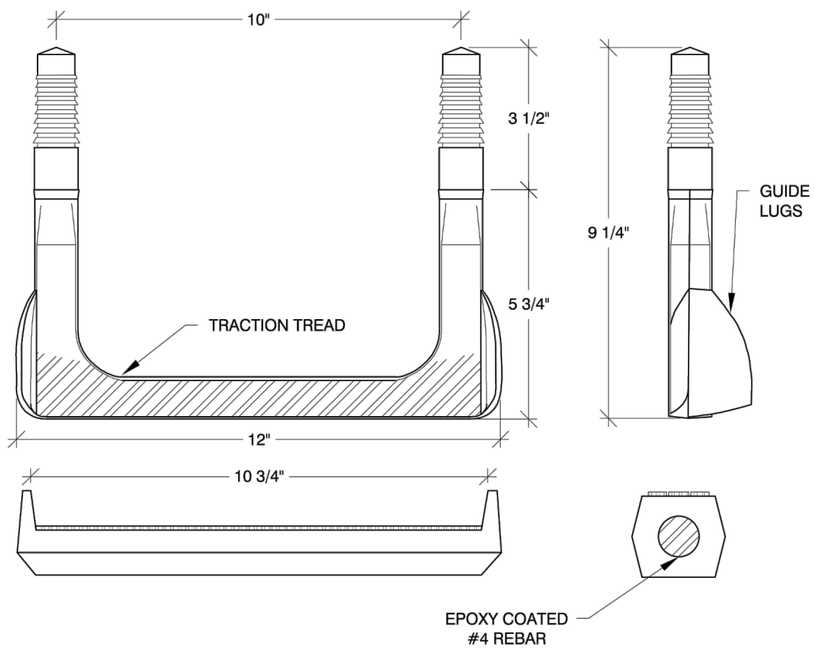

NOTES:

1. LADDER RUNGS ARE REQUIRED IN ALL MANHOLES AND BOXES
2. MANHOLE STEPS SHALL BE PLACED AT 12" ON CENTER
3. STEPS SHALL BE AN EPOXY COATED REBAR OR OTHER APPROVED EQUAL
   3.1. REINFORCEMENT: ASTM A 615, GRADE 60, DEFORMED STEEL. SEE APWA SECTION 03 20 00.
4. THE STEPS MUST BE BETWEEN 10" AND 13" WIDE
5. THE UPPER SURFACE OF EACH STEP SHALL HAVE A TRACTION TREAD AND GUIDE LUGS ON EACH SIDE
6. INSTALLATION METHOD MUST PRODUCE A STEP CAPABLE OF RESISTING A 300 POUND VERTICAL LOAD
7. THE INSTALLED STEPS SHOULD MEET THE MINIMUM REQUIREMENTS OF ASTM C 478 AND THE REQUIREMENTS OF OSHA

OGDEN CITY ENGINEERING - STANDARD DRAWINGS		
Ogden UTAH Still Untamed	**MANHOLE STEP DETAIL (TYPICAL)**	**SS-6**
	JUSTIN ANDERSON, CITY ENGINEER	SHEET 1 OF 1

MANHOLE STEP DETAIL 10/24
10

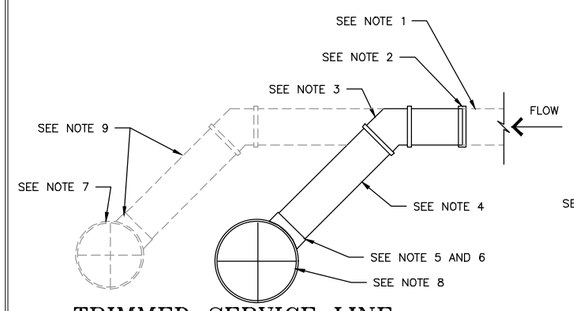

TRIMMED SERVICE LINE

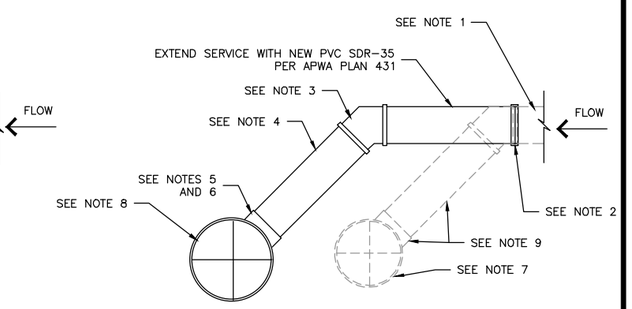

EXTENDED SERVICE LINE

NOTES:

1. CUT EXISTING SERVICE LINE TO A NEAT STRAIGHT EDGE AND REMOVE ALL BURRS PRIOR TO ATTACHING NEW SERVICE PIPE.
2. ONLY HARD PLASTIC OR DUCTILE IRON TRANSITION COUPLERS WILL BE PERMITTED.
3. INSTALL ANGLE FITTINGS AS REQUIRED.
4. INSTALL NEW PVC SDR-35 SERVICE LINE AND CONNECT TO INSERTA TEE FITTING PER FITTING MANUFACTURES' RECOMMENDATIONS.
5. INSTALL INSERTA TEE PIPE FITTING PER MANUFACTURES' RECOMMENDATIONS.
6. POSITION INSERTA TEE AND ELBOWS TO LOCATE SERVICE CONNECTION INVERT AT OR ABOVE SPRINGLINE OF SEWER AS SHOWN.
7. EXISTING SEWER PIPE.
8. NEW SEWER PIPE.
9. CONTRACTOR SHALL REMOVE NECESSARY PIPE AND FITTINGS, THEN CAP THE REMAINING SERVICE LINE.

SEWER LATERAL CLEANOUT 11/24
SCALE: NTS

SCALE: N/A

VERIFY SCALE
BAR IS ONE-HALF INCH ON ORIGINAL DRAWING

DESIGNED BY: JB
DRAWN BY: BS
CHECKED BY: VBG
APPROVED BY: JB
DATE: March 2024
EWO NO: XXXXXXX
ACCOUNT NO: ----

REVISIONS

NO.	DATE	MADE BY	AUTH. BY

OGDEN CITY
21ST STREET SEWER MAIN UPGRADE
DETAILS

Ogden UTAH Still Untamed

PROFESSIONAL ENGINEER No. 10489067-2202 JOSEPH CLYDE WILLIAMSON STATE OF UTAH 6-30-24

DRAWING NO.
DT-7
SHEET 24 OF 36

P:\West Jordan\2023\Projects\W230903UT.00 - Ogden - 21st Sewer Main Upgrade\03_Design\Sheets\DT_DoghouseMH.dwg Mar 29, 2024 - 9:55am

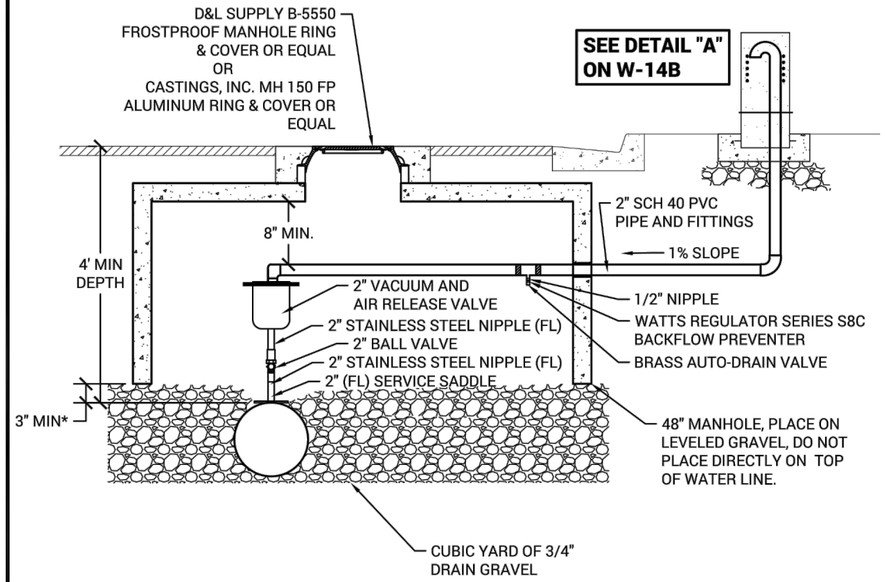

NOTES:

1. FOLLOW AWWA AND NSF STANDARDS WHEN CONNECTING THE PIPE TO A WATER MAIN.
2. UNTREATED BASE COURSE: PROVIDE MATERIAL SPECIFIED IN APWA SECTION 32 11 23.
   2.1. PLACE MATERIAL PER APWA SECTION 32 05 10.
   2.2. COMPACT PER APWA SECTION 31 23 26 TO A MODIFIED PROCTOR DENSITY OF 95 PERCENT OR GREATER. MAXIMUM LIFT THICKNESS IS 8" WHEN USING RIDING COMPACTION AND 6" WHEN USING HAND HELD COMPACTION EQUIPMENT.
3. SEWER ROCK: INSTALL SEWER ROCK PER APWA SECTION 31 05 13, AROUND THE DRAIN PIPE AS NEEDED.
4. CONCRETE: CLASS 4000 PER APWA SECTION 03 30 04. PLACE CONCRETE PER APWA SECTION 03 30 10. PROVIDE 1/2" RADIUS ON ALL EDGES EXPOSED TO VIEW.
5. SMALL FITTINGS SHALL BE STAINLESS STEEL. DO NOT USE GALVANIZED MATERIALS.
6. SEAL MANHOLE JOINTS WATERTIGHT AND GROUND FLUSH WHEN CONNECTING PIPING.
   6.1. WATERTIGHT SEAL SHALL BE WATERPROOF AND COMPRESSIBLE.
7. VENT SHALL BE LOCATED IN THE PARKSTRIP.
8. AIR/VAC SHALL BE SIMPLE LEVER TYPE KINETIC COMBINATION AIR VALVE WITH CAST IRON BODY AND STAINLESS STEEL FLOATS.
9. SERVICE SADDLE IS REQUIRED ON ALL PIPES.
10. THE AIR VAC ASSEMBLY SIZE AND LOCATION MUST BE DESIGNED & STAMPED BY A PROFESSIONAL ENGINEER. THE DRAWING SHOWN IS AN EXAMPLE OF THE LAYOUT.

OGDEN CITY ENGINEERING - STANDARD DRAWINGS		
Ogden UTAH Still Untamed	2" AIR COMBINATION VALVE	W-14A
	JUSTIN ANDERSON, CITY ENGINEER	SHEET 1 OF 2 | 2019

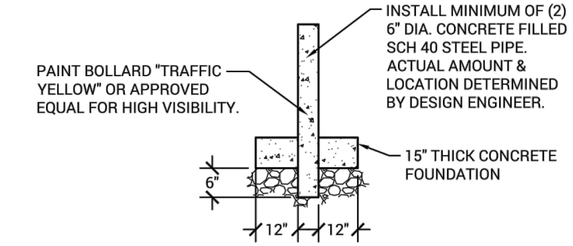

BOLLARD

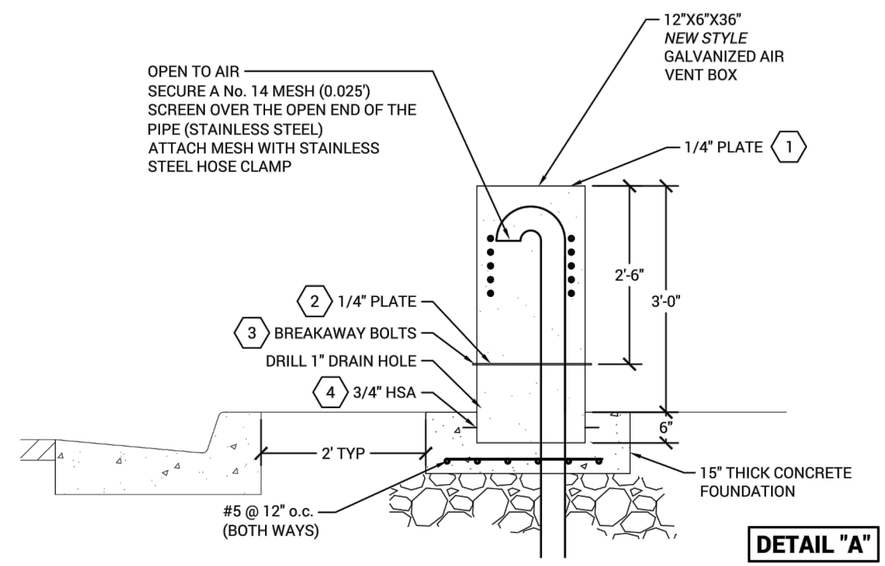

DETAIL "A"

ITEM	QTY	DESCRIPTION
1	1	1/4" PL - 6" x 1'-0"
2	2	1/4" PL - 9" x 1'-3"
3	10	1/2" x 3" BREAKAWAY BOLTS
4	4	3/4" x 4" HSA

OGDEN CITY ENGINEERING - STANDARD DRAWINGS		
Ogden UTAH Still Untamed	2" AIR COMBINATION VALVE	W-14B
	JUSTIN ANDERSON, CITY ENGINEER	SHEET 2 OF 2 | 2019

2" AIR COMBINATION VALVE 12/25
SCALE: NTS

SCALE: HORIZ. N/A VERTICAL SCALE: N/A
VERIFY SCALE
BAR IS ONE-HALF INCH ON ORIGINAL DRAWING

DESIGNED BY: JGW
DRAWN BY: BS
CHECKED BY: VBG
APPROVED BY: JGW
DATE: March 2024
ENG NO: XXXXXXXX
ACCOUNT NO: ----

REVISIONS

NO.	DATE	MADE BY	AUTH. BY

OGDEN CITY
21ST STREET SEWER MAIN UPGRADE
DETAILS

Ogden UTAH Still Untamed

PROFESSIONAL ENGINEER No. 10489867-2202 JOSEPH CLYDE WILLIAMSON STATE OF UTAH 6-29-24

DRAWING NO. DT-8
SHEET 25 OF 36

P:\West Jordan\2023\Projects\W230903UT.00 - Ogden - 21st Sewer Main Upgrade\03_Design\Sheets\Details.dwg Mar 29, 2024 - 9:55am

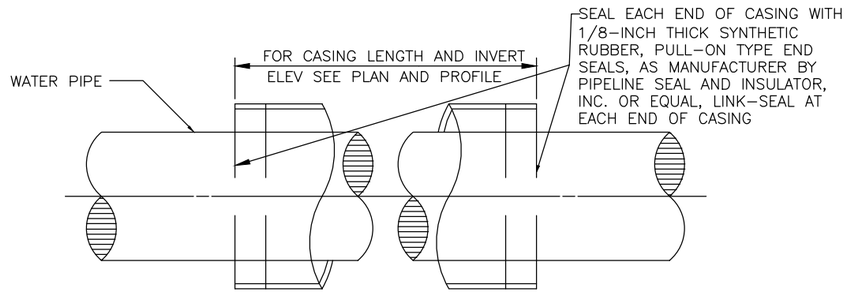

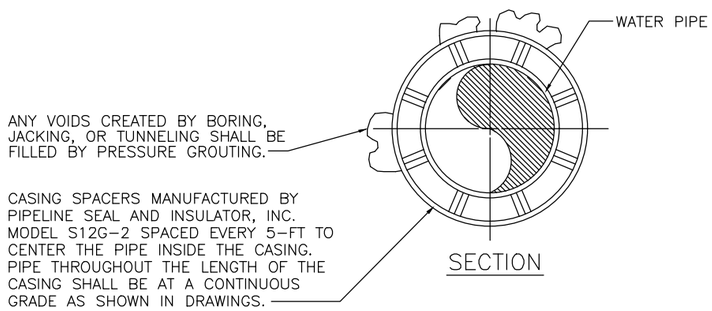

MINIMUM WALL THICKNESS OF CASINGS	
Diameter	Wall Thickness
12" and under	0.188"
14" – 18"	0.312"
20" – 22"	0.375"
24" – 26"	0.438"
28" – 32"	0.500"
34" – 42"	0.562"

LARGER CASINGS AS DIRECTED BY THE CITY ENGINEER.

NOTES:

1. CASING PIPES SHALL BE REQUIRED AS INDICATED ON THE DRAWINGS AND/OR WHERE REQUIRED BY THE CITY INSPECTOR OR ENGINEER.
3. CARRIER PIPE SHALL BE TESTED BEFORE SEALING THE ENDS OF THE CASING.
3. SPACERS SHALL BE SECURELY ATTACHED TO CARRIER PIPE PER MANUFACTURER'S REQUIREMENTS.
4. CASING PIPE SHALL BE WELDED STEEL, ASTM A53, GRADE B.

STEEL CASING DETAIL

SCALE: NTS

13
26

SCALE:
HORIZ. N/A
VERTICAL SCALE: N/A

VERIFY SCALE
BAR IS ONE-HALF INCH ON ORIGINAL DRAWING

DESIGNED BY: JGW
DRAWN BY: BS
CHECKED BY: VBG
APPROVED BY: JGW
DATE: March 2024
EWO NO: XXXXXXX
ACCOUNT NO: ----

REVISIONS

NO.	DATE		MADE BY	AUTH. BY
1	3/27	ADDED STEEL CASING DETAIL	BS	JW

OGDEN CITY
21ST STREET SEWER MAIN UPGRADE

DETAILS

Ogden UTAH City Government

PROFESSIONAL ENGINEER
No. 9405607-2202
JOSEPH CLYDE WILLARDSON
5-29-24
STATE OF UTAH

DRAWING NO.
DT-9

SHEET 26 OF 36

P:\West Jordan\2023\Projects\W230903UT.00 - Ogden - 21st Sewer Main Upgrade\03_Design\Sheets\Details.dwg Mar 29, 2024 - 9:55am

DATE DRILLED 3/28/23 BORING NO. B-1

GROUND ELEVATION 4,291' ± (MSL) SHEET 1 OF 2

METHOD OF DRILLING Mobile B-80 Hollow-Stem Auger Drill Rig

DRIVE WEIGHT 140 lbs. (Auto. Trip) DROP 30"

SAMPLED BY EAS LOGGED BY EAS REVIEWED BY REG/EDE

DEPTH (feet)	SAMPLES (Bulk / Driven)	BLOWS/FOOT	MOISTURE (%)	DRY DENSITY (PCF)	SYMBOL	CLASSIFICATION U.S.C.S.	DESCRIPTION/INTERPRETATION
0							ASPHALT CONCRETE: Unit is approximately 6.5 inches thick.
							CONCRETE PAVEMENT: Unit is approximately 7 inches thick.
						SM	FILL: Brown, moist, very loose, silty SAND.
		2/6" 2/6" 1/6"					
5		2/6" 2/6" 2/6"	15.8	112.3		CL	NATIVE SOIL: Brown, moist, firm, sandy lean CLAY.
		4/6" 5/6" 4/6"					Stiff.
10							
15		5/6" 14/6" 15/6"					Wet; hard.
20							

FIGURE A- 1

Ninyo & Moore
Geotechnical & Environmental Sciences Consultants

21ST STREET SEWER UPGRADE PROJECT
21ST STREET, WASHINGTON BOULEVARD TO WALL AVENUE, OGDEN, UTAH
800254001 | 5/23

DATE DRILLED 3/28/23 BORING NO. B-1

GROUND ELEVATION 4,291' ± (MSL) SHEET 2 OF 2

METHOD OF DRILLING Mobile B-80 Hollow-Stem Auger Drill Rig

DRIVE WEIGHT 140 lbs. (Auto. Trip) DROP 30"

SAMPLED BY EAS LOGGED BY EAS REVIEWED BY REG/EDE

DEPTH (feet)	SAMPLES (Bulk / Driven)	BLOWS/FOOT	MOISTURE (%)	DRY DENSITY (PCF)	SYMBOL	CLASSIFICATION U.S.C.S.	DESCRIPTION/INTERPRETATION
20		12/6" 14/6" 19/6"				SM	NATIVE SOIL: (Continued) Light brown, wet, dense, silty SAND with gravel.
							Total Depth = 21.5 feet. Groundwater was encountered at a depth of approximately 12 feet during drilling. Backfilled and patched on 3/28/23
							Notes: Groundwater may rise to a level higher than that measured in borehole due to seasonal variations in precipitation and several other factors as discussed in the report.
25							The ground elevation shown above is an estimation only. It is based on our interpretations of published maps and other documents reviewed for the purposes of this evaluation. It is not sufficiently accurate for preparing construction bids and design documents.
30							
35							
40							

FIGURE A- 2

Ninyo & Moore
Geotechnical & Environmental Sciences Consultants

21ST STREET SEWER UPGRADE PROJECT
21ST STREET, WASHINGTON BOULEVARD TO WALL AVENUE, OGDEN, UTAH
800254001 | 5/23

SCALE: HORIZ. N/A VERTICAL SCALE: N/A

VERIFY SCALE
BAR IS ONE-HALF INCH ON ORIGINAL DRAWING

DESIGNED BY: JB
DRAWN BY: BS
CHECKED BY:
APPROVED BY: JB
DATE: March 2024
ENO NO: XXXXXXX
ACCOUNT NO: ----

REVISIONS

NO.	DATE	MADE BY	AUTH. BY

OGDEN CITY
21ST STREET SEWER MAIN UPGRADE

BORE LOGS

Ogden UTAH Still Weekend

LICENSED PROFESSIONAL ENGINEER No. 9456867-2202 JOSEPH CLYDE WILLARDSON STATE OF UTAH 3-29-24

DRAWING NO. BL-1

SHEET 26 OF 36

P:\West Jordan\2023\Projects\W230903UT.00 - Ogden - 21st Sewer Main Upgrade\03_Design\Sheets\Bore Logs.dwg Mar 29, 2024 - 9:55am

DATE DRILLED 3/29/23 BORING NO. B-2

GROUND ELEVATION 4,292' ± (MSL) SHEET 1 OF 2

METHOD OF DRILLING Mobile B-80 Hollow-Stem Auger Drill Rig

DRIVE WEIGHT 140 lbs. (Auto. Trip) DROP 30"

SAMPLED BY EAS LOGGED BY EAS REVIEWED BY REG/EDE

DEPTH (feet)	SAMPLES (Bulk / Driven)	BLOWS/FOOT	MOISTURE (%)	DRY DENSITY (PCF)	SYMBOL	CLASSIFICATION U.S.C.S.	DESCRIPTION/INTERPRETATION
0							ASPHALT CONCRETE: Unit is approximately 1.5 inches thick.
						CL	CONCRETE PAVEMENT: Unit is approximately 6.5 inches thick.
						CL	FILL: Dark brown, moist, firm, lean CLAY with sand; trace gravel.
		3/6" 11/6" 18/6"	16.1	101.1			NATIVE SOIL: Light brown, moist, very stiff, sandy lean CLAY with gravel.
5		11/6" 21/6" 36/6"					Very dense.
		3/6" 13/6" 26/6"	2.9	101.3		GM	Light brown, moist, medium dense, silty GRAVEL with sand.
10		6/6" 10/6" 14/6"					Wet; dense.
15		6/6" 14/6" 22/6"	9.7	108.1			Medium dense.
20							

FIGURE A- 3

Ninyo & Moore Geotechnical & Environmental Sciences Consultants

21ST STREET SEWER UPGRADE PROJECT
21ST STREET, WASHINGTON BOULEVARD TO WALL AVENUE, OGDEN, UTAH
800254001 | 5/23

DATE DRILLED 3/29/23 BORING NO. B-2

GROUND ELEVATION 4,292' ± (MSL) SHEET 2 OF 2

METHOD OF DRILLING Mobile B-80 Hollow-Stem Auger Drill Rig

DRIVE WEIGHT 140 lbs. (Auto. Trip) DROP 30"

SAMPLED BY EAS LOGGED BY EAS REVIEWED BY REG/EDE

DEPTH (feet)	SAMPLES (Bulk / Driven)	BLOWS/FOOT	MOISTURE (%)	DRY DENSITY (PCF)	SYMBOL	CLASSIFICATION U.S.C.S.	DESCRIPTION/INTERPRETATION
20		2/6" 3/6" 21/6"				GM	NATIVE SOIL: (Continued) Light brown, wet, dense, silty GRAVEL with sand.
							Total Depth = 21.5 feet. Groundwater was encountered at a depth of approximately 8.5 feet during drilling. Backfilled and patched on 3/29/23
25							Notes: Groundwater may rise to a level higher than that measured in borehole due to seasonal variations in precipitation and several other factors as discussed in the report.
							The ground elevation shown above is an estimation only. It is based on our interpretations of published maps and other documents reviewed for the purposes of this evaluation. It is not sufficiently accurate for preparing construction bids and design documents.
30							
35							
40							

FIGURE A- 4

Ninyo & Moore Geotechnical & Environmental Sciences Consultants

21ST STREET SEWER UPGRADE PROJECT
21ST STREET, WASHINGTON BOULEVARD TO WALL AVENUE, OGDEN, UTAH
800254001 | 5/23

SCALE: HORIZ. N/A VERTICAL SCALE: N/A

VERIFY SCALE
BAR IS ONE-HALF INCH ON ORIGINAL DRAWING

DESIGNED BY: JB
DRAWN BY: BS
CHECKED BY:
APPROVED BY: JB
DATE: March 2024
ENG NO: XXXXXXX
ACCOUNT NO: ----

REVISIONS

NO.	DATE	MADE BY	AUTH. BY

OGDEN CITY
21ST STREET SEWER MAIN UPGRADE
BORE LOGS

Ogden City Self Government

PROFESSIONAL ENGINEER LICENSED No. 9456867-2202 JOSEPH CLYDE WILLARDSON STATE OF UTAH 5-29-24

DRAWING NO. BL-2

SHEET 27 OF 36

P:\West Jordan\2023\Projects\W230903UT.00 - Ogden - 21st Sewer Main Upgrade\03_Design\Sheets\Bore Logs.dwg Mar 29, 2024 - 9:55am

DATE DRILLED 3/28/23 BORING NO. B-3

GROUND ELEVATION 4,292' ± (MSL) SHEET 1 OF 2

METHOD OF DRILLING Mobile B-80 Hollow-Stem Auger Drill Rig

DRIVE WEIGHT 140 lbs. (Auto. Trip) DROP 30"

SAMPLED BY EAS LOGGED BY EAS REVIEWED BY REG/EDE

DEPTH (feet)	SAMPLES (Bulk / Driven)	BLOWS/FOOT	MOISTURE (%)	DRY DENSITY (PCF)	SYMBOL	CLASSIFICATION U.S.C.S.	DESCRIPTION/INTERPRETATION
0							ASPHALT CONCRETE: Unit is approximately 2.5 inches thick.
							CONCRETE PAVEMENT: Unit is approximately 8.5 inches thick.
						CL	FILL: Dark brown, moist, firm, lean CLAY with sand.
		3/6" 6/6" 8/6"	20.0	106.8		CL	NATIVE SOIL: Light brown, moist, very stiff, lean CLAY with sand.
						SM	Light brown, moist, loose, silty SAND.
5		2/6" 3/6" 6/6"					Medium dense.
		3/6" 3/6" 3/6"	20.3	92.8			Brown; loose; few gravel.
10		1/6" 3/6" 7/6"					Orangish brown; wet; medium dense.
15		8/6" 23/6" 25/6"	16.9	106.8			Light brown; dense.
20							

FIGURE A- 5

Ninyo & Moore Geotechnical & Environmental Sciences Consultants

21ST STREET SEWER UPGRADE PROJECT
21ST STREET, WASHINGTON BOULEVARD TO WALL AVENUE, OGDEN, UTAH
800254001 | 5/23

DATE DRILLED 3/28/23 BORING NO. B-3

GROUND ELEVATION 4,292' ± (MSL) SHEET 2 OF 2

METHOD OF DRILLING Mobile B-80 Hollow-Stem Auger Drill Rig

DRIVE WEIGHT 140 lbs. (Auto. Trip) DROP 30"

SAMPLED BY EAS LOGGED BY EAS REVIEWED BY REG/EDE

DEPTH (feet)	SAMPLES (Bulk / Driven)	BLOWS/FOOT	MOISTURE (%)	DRY DENSITY (PCF)	SYMBOL	CLASSIFICATION U.S.C.S.	DESCRIPTION/INTERPRETATION
20		3/6" 3/6" 6/6"				SM	NATIVE SOIL: (Continued) Light brown, wet, medium dense, silty SAND with gravel.
							Total Depth = 21.5 feet. Groundwater was encountered at a depth of approximately 8.0 feet during drilling. Backfilled and patched on 3/28/23
25							Notes: Groundwater may rise to a level higher than that measured in borehole due to seasonal variations in precipitation and several other factors as discussed in the report. The ground elevation shown above is an estimation only. It is based on our interpretations of published maps and other documents reviewed for the purposes of this evaluation. It is not sufficiently accurate for preparing construction bids and design documents.
30							
35							
40							

FIGURE A- 6

Ninyo & Moore Geotechnical & Environmental Sciences Consultants

21ST STREET SEWER UPGRADE PROJECT
21ST STREET, WASHINGTON BOULEVARD TO WALL AVENUE, OGDEN, UTAH
800254001 | 5/23

SCALE: HORIZ. N/A VERTICAL SCALE: N/A

VERIFY SCALE
BAR IS ONE-HALF INCH ON ORIGINAL DRAWING

DESIGNED BY: JB
DRAWN BY: BS
CHECKED BY:
APPROVED BY: JB
DATE: March 2024
ENO NO.: XXXXXXX
ACCOUNT NO.: ----

REVISIONS

NO.	DATE	MADE BY	AUTH. BY

OGDEN CITY
21ST STREET SEWER MAIN UPGRADE

BORE LOGS

Ogden City UTAH Still Optimized

PROFESSIONAL ENGINEER No. 10486867-2202 JOSEPH CLYDE WILLARDSON STATE OF UTAH 6-29-24

DRAWING NO. BL-3

SHEET 28 OF 36

P:\West Jordan\2023\Projects\W230903UT.00 - Ogden - 21st Sewer Main Upgrade\03_Design\Sheets\Bore Logs.dwg Mar 29, 2024 - 9:56am

DATE DRILLED 3/28/23 BORING NO. B-4

GROUND ELEVATION 4,293' ± (MSL) SHEET 1 OF 2

METHOD OF DRILLING Mobile B-80 Hollow-Stem Auger Drill Rig

DRIVE WEIGHT 140 lbs. (Auto. Trip) DROP 30"

SAMPLED BY EAS LOGGED BY EAS REVIEWED BY REG/EDE

DEPTH (feet)	SAMPLES (Bulk / Driven)	BLOWS/FOOT	MOISTURE (%)	DRY DENSITY (PCF)	SYMBOL	CLASSIFICATION U.S.C.S.	DESCRIPTION/INTERPRETATION
0							ASPHALT CONCRETE: Unit is approximately 4 inches thick.
							CONCRETE PAVEMENT: Unit is approximately 9 inches thick.
						SM	
						CL	FILL: Light brown, moist, medium dense, silty SAND.
							NATIVE SOIL: Brown, moist, stiff, lean CLAY with sand.
		2/6" 4/6" 5/6"					
		2/6" 4/6" 4/6"	19.1	103.2			
5							
							Soft.
		1/6" 1/6" 2/6"					
						SM	Brown, moist, very loose, silty SAND.
							Loose.
		3/6" 3/6" 5/6"					
10							
15							SP-SM Light brown, wet, medium dense, poorly graded SAND with silt and gravel.
		1/6" 6/6" 12/6"					
20							

FIGURE A- 7

Ninyo & Moore
Geotechnical & Environmental Sciences Consultants

21ST STREET SEWER UPGRADE PROJECT
21ST STREET, WASHINGTON BOULEVARD TO WALL AVENUE, OGDEN, UTAH
800254001 | 5/23

DATE DRILLED 3/28/23 BORING NO. B-4

GROUND ELEVATION 4,293' ± (MSL) SHEET 2 OF 2

METHOD OF DRILLING Mobile B-80 Hollow-Stem Auger Drill Rig

DRIVE WEIGHT 140 lbs. (Auto. Trip) DROP 30"

SAMPLED BY EAS LOGGED BY EAS REVIEWED BY REG/EDE

DEPTH (feet)	SAMPLES (Bulk / Driven)	BLOWS/FOOT	MOISTURE (%)	DRY DENSITY (PCF)	SYMBOL	CLASSIFICATION U.S.C.S.	DESCRIPTION/INTERPRETATION
20							
		8/6" 22/6" 30/6"				SP-SM	NATIVE SOIL: (Continued) Light brown, wet, dense, poorly graded SAND with silt and gravel.
							Total Depth = 21.5 feet. Groundwater was encountered at a depth of approximately 13.0 feet during drilling. Backfilled and patched on 3/28/23
25							Notes: Groundwater may rise to a level higher than that measured in borehole due to seasonal variations in precipitation and several other factors as discussed in the report.
							The ground elevation shown above is an estimation only. It is based on our interpretations of published maps and other documents reviewed for the purposes of this evaluation. It is not sufficiently accurate for preparing construction bids and design documents.
30							
35							
40							

FIGURE A- 8

Ninyo & Moore
Geotechnical & Environmental Sciences Consultants

21ST STREET SEWER UPGRADE PROJECT
21ST STREET, WASHINGTON BOULEVARD TO WALL AVENUE, OGDEN, UTAH
800254001 | 5/23

SCALE: HORIZ. N/A VERTICAL SCALE: N/A

VERIFY SCALE
BAR IS ONE-HALF INCH ON ORIGINAL DRAWING

DESIGNED BY: JB
DRAWN BY: BS
CHECKED BY:
APPROVED BY: JB
DATE: March 2024
ENG NO: XXXXXXX
ACCOUNT NO: ----

REVISIONS

NO.	DATE	MADE BY	AUTH. BY

OGDEN CITY
21ST STREET SEWER MAIN UPGRADE

BORE LOGS

Ogden UTAH Still Uplifting

PROFESSIONAL ENGINEER No. 10486867-2202 JOSEPH CLYDE WILLARDSON STATE OF UTAH LICENSED 5-29-24

DRAWING NO. BL-4

SHEET 29 OF 36

P:\West Jordan\2023\Projects\W230903UT.00 - Ogden - 21st Sewer Main Upgrade\03_Design\Sheets\Bore Logs.dwg Mar 29, 2024 - 9:56am

DATE DRILLED 3/28/23 BORING NO. B-5

GROUND ELEVATION 4,295' ± (MSL) SHEET 1 OF 2

METHOD OF DRILLING Mobile B-80 Hollow-Stem Auger Drill Rig

DRIVE WEIGHT 140 lbs. (Auto. Trip) DROP 30"

SAMPLED BY EAS LOGGED BY EAS REVIEWED BY REG/EDE

DEPTH (feet)	SAMPLES (Bulk / Driven)	BLOWS/FOOT	MOISTURE (%)	DRY DENSITY (PCF)	SYMBOL	CLASSIFICATION U.S.C.S.	DESCRIPTION/INTERPRETATION
0							ASPHALT CONCRETE: Unit is approximately 6 inches thick.
							CONCRETE PAVEMENT: Unit is approximately 8 inches thick.
						SM	FILL: Brown, moist, medium dense, silty SAND.
		3/6" 8/6" 15/6"	15.9	110.5			
						CL	NATIVE SOIL: Brown, moist, very stiff, sandy lean CLAY.
							Soft.
		2/6" 2/6" 1/6"					
5						SM	Brown, moist, very loose, silty SAND.
							Loose.
		2/6" 4/6" 8/6"	18.9	103.7			
							Light brown; dense.
		8/6" 13/6" 12/6"					
10							
15							SP-SM Brown, wet, medium dense, poorly graded SAND with silt and gravel.
		6/6" 16/6" 14/6"	20.9	93.4			
20							

FIGURE A- 9

Ninyo & Moore
Geotechnical & Environmental Sciences Consultants

21ST STREET SEWER UPGRADE PROJECT
21ST STREET, WASHINGTON BOULEVARD TO WALL AVENUE, OGDEN, UTAH
800254001 | 5/23

DATE DRILLED 3/28/23 BORING NO. B-5

GROUND ELEVATION 4,295' ± (MSL) SHEET 2 OF 2

METHOD OF DRILLING Mobile B-80 Hollow-Stem Auger Drill Rig

DRIVE WEIGHT 140 lbs. (Auto. Trip) DROP 30"

SAMPLED BY EAS LOGGED BY EAS REVIEWED BY REG/EDE

DEPTH (feet)	SAMPLES (Bulk / Driven)	BLOWS/FOOT	MOISTURE (%)	DRY DENSITY (PCF)	SYMBOL	CLASSIFICATION U.S.C.S.	DESCRIPTION/INTERPRETATION
20		12/6" 10/6" 12/6"				SP-SM	NATIVE SOIL: (Continued) Brown, wet, dense, poorly graded SAND with silt and gravel.
							Total Depth = 21.5 feet. Groundwater was encountered at a depth of approximately 15.0 feet during drilling. Backfilled and patched on 3/28/23
							Notes: Groundwater may rise to a level higher than that measured in borehole due to seasonal variations in precipitation and several other factors as discussed in the report.
25							The ground elevation shown above is an estimation only. It is based on our interpretations of published maps and other documents reviewed for the purposes of this evaluation. It is not sufficiently accurate for preparing construction bids and design documents.
30							
35							
40							

FIGURE A- 10

Ninyo & Moore
Geotechnical & Environmental Sciences Consultants

21ST STREET SEWER UPGRADE PROJECT
21ST STREET, WASHINGTON BOULEVARD TO WALL AVENUE, OGDEN, UTAH
800254001 | 5/23

SCALE: HORIZ. N/A VERTICAL SCALE: N/A

VERIFY SCALE
BAR IS ONE-HALF INCH ON ORIGINAL DRAWING

DESIGNED BY: JB
DRAWN BY: BS
CHECKED BY:
APPROVED BY: JB
DATE: March 2024
ENO NO: XXXXXXX
ACCOUNT NO: ----

REVISIONS

NO.	DATE	MADE BY	AUTH. BY

OGDEN CITY
21ST STREET SEWER MAIN UPGRADE

BORE LOGS

DRAWING NO. BL-5

SHEET 30 OF 36

P:\West Jordan\2023\Projects\W230903UT.00 - Ogden - 21st Sewer Main Upgrade\03_Design\Sheets\Bore Logs.dwg Mar 29, 2024 - 9:56am

DATE DRILLED 3/29/23 BORING NO. B-6

GROUND ELEVATION 4,297' ± (MSL) SHEET 1 OF 2

METHOD OF DRILLING Mobile B-80 Hollow-Stem Auger Drill Rig

DRIVE WEIGHT 140 lbs. (Auto. Trip) DROP 30"

SAMPLED BY EAS LOGGED BY EAS REVIEWED BY REG/EDE

DEPTH (feet)	SAMPLES (Bulk / Driven)	BLOWS/FOOT	MOISTURE (%)	DRY DENSITY (PCF)	SYMBOL	CLASSIFICATION U.S.C.S.	DESCRIPTION/INTERPRETATION
0							ASPHALT CONCRETE: Unit is approximately 5 inches thick.
							CONCRETE PAVEMENT: Unit is approximately 8 inches thick.
						SM	FILL: Dark brown, moist, medium dense, silty SAND.
		4/6" 4/6" 4/6"					
5		4/6" 7/6" 8/6"	17.3	103.2		SC	NATIVE SOIL: Brown, moist, medium dense, SILT with sand.
		2/6" 2/6" 3/6"					Loose.
						SP-SM	Light brown, moist, medium dense, poorly graded SAND with silt and gravel.
10		6/6" 10/6" 8/6"	12.6	117.9			
15		8/6" 11/6" 12/6"	▽				Wet; dense.
20							

FIGURE A- 11

Ninyo & Moore
Geotechnical & Environmental Sciences Consultants

21ST STREET SEWER UPGRADE PROJECT
21ST STREET, WASHINGTON BOULEVARD TO WALL AVENUE, OGDEN, UTAH
800254001 | 5/23

DATE DRILLED 3/29/23 BORING NO. B-6

GROUND ELEVATION 4,297' ± (MSL) SHEET 2 OF 2

METHOD OF DRILLING Mobile B-80 Hollow-Stem Auger Drill Rig

DRIVE WEIGHT 140 lbs. (Auto. Trip) DROP 30"

SAMPLED BY EAS LOGGED BY EAS REVIEWED BY REG/EDE

DEPTH (feet)	SAMPLES (Bulk / Driven)	BLOWS/FOOT	MOISTURE (%)	DRY DENSITY (PCF)	SYMBOL	CLASSIFICATION U.S.C.S.	DESCRIPTION/INTERPRETATION
20		5/6" 12/6" 13/6"				SP-SM	NATIVE SOIL: (Continued) Light brown, wet, medium dense, poorly graded SAND with silt and gravel.
							Total Depth = 21.5 feet. Groundwater was encountered at a depth of approximately 15.0 feet during drilling. Backfilled and patched on 3/29/23
							Notes: Groundwater may rise to a level higher than that measured in borehole due to seasonal variations in precipitation and several other factors as discussed in the report.
25							The ground elevation shown above is an estimation only. It is based on our interpretations of published maps and other documents reviewed for the purposes of this evaluation. It is not sufficiently accurate for preparing construction bids and design documents.
30							
35							
40							

FIGURE A- 12

Ninyo & Moore
Geotechnical & Environmental Sciences Consultants

21ST STREET SEWER UPGRADE PROJECT
21ST STREET, WASHINGTON BOULEVARD TO WALL AVENUE, OGDEN, UTAH
800254001 | 5/23

SCALE: HORIZ. N/A VERTICAL SCALE: N/A

VERIFY SCALE
BAR IS ONE-HALF INCH ON ORIGINAL DRAWING

DESIGNED BY: JB
DRAWN BY: BS
CHECKED BY:
APPROVED BY: JB
DATE: March 2024
ENO NO: XXXXXXX
ACCOUNT NO: ----

REVISIONS

NO.	DATE	MADE BY	AUTH. BY

OGDEN CITY
21ST STREET SEWER MAIN UPGRADE

BORE LOGS

Ogden UTAH Still Underwater

PROFESSIONAL ENGINEER No. 9486867-2202 JOSEPH CLYDE WILLARDSON STATE OF UTAH 5-29-24

DRAWING NO. BL-6

SHEET 31 OF 36

P:\West Jordan\2023\Projects\W230903UT.00 - Ogden - 21st Sewer Main Upgrade\03_Design\Sheets\Bore Logs.dwg Mar 29, 2024 - 9:56am

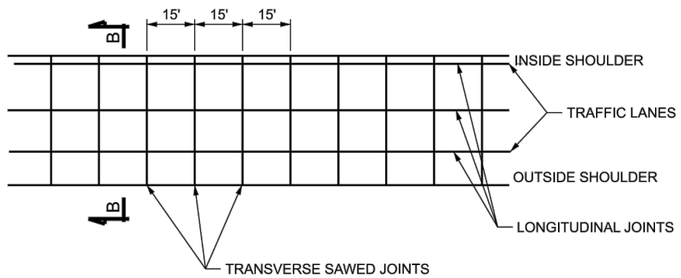

TYPICAL JOINT LOCATION DETAIL

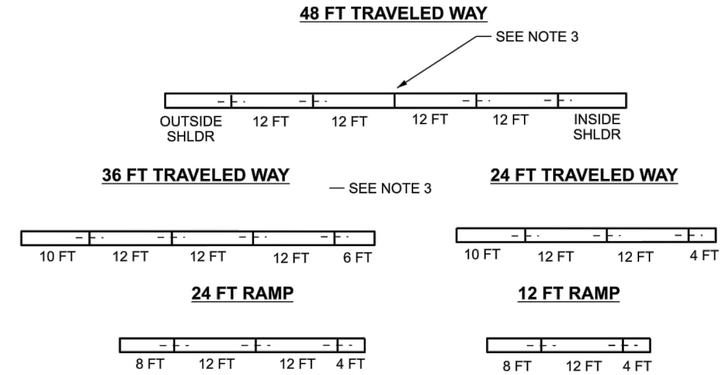

SECTION B-B
REQUIRED PAVING CONFIGURATIONS

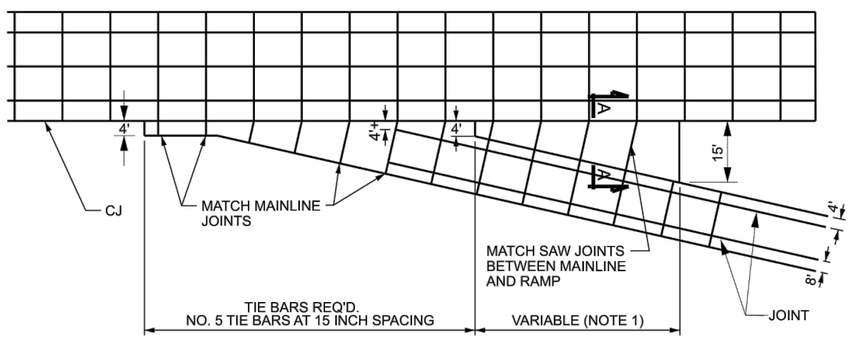

SHOULDER TRANSITION FOR RAMPS AND RAMP GORE PAVING DETAIL

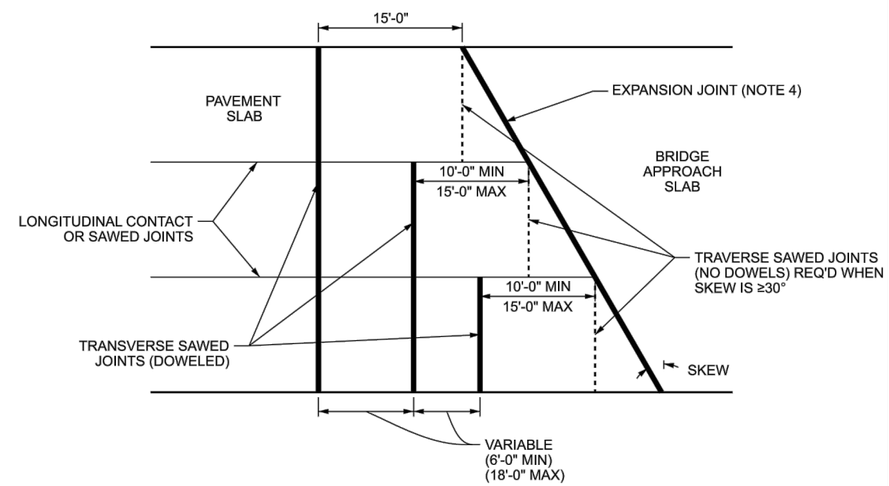

SKEWED APPROACH SLAB

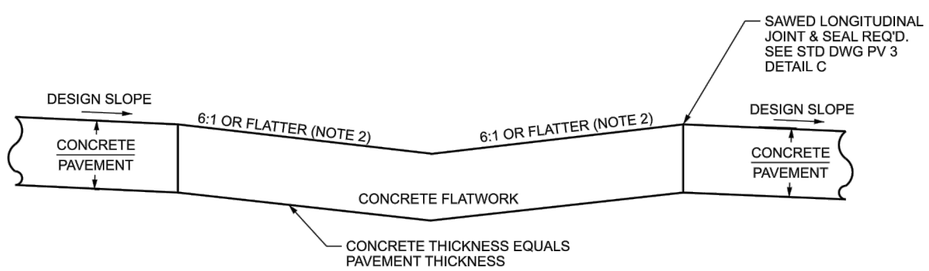

SECTION A-A

NOTES:

1. ESTIMATED QUANTITIES FOR CONCRETE FLATWORK ARE CALCULATED ON TANGENT SECTION. IN ALL CASES LENGTH OF GORE PAVING WILL BE CARRIED AHEAD UNTIL THE DISTANCE BETWEEN PAVING IS 15 FT.
2. SLOPE MAY VARY TO MEET DESIGN CONDITIONS ON RAMP AND MAINLINE. GRADE TO DRAIN, ADJUST FOR FIELD CONDITIONS.
3. TIE ALL LONGITUDINAL JOINTS UNLESS ROADWAY INCLUDES MORE THAN THREE TRAVEL LANES. IN THAT CASE LEAVE ONE OF THE THREE CENTER LONGITUDINAL JOINTS UNTIED. DO NOT TIE MORE THAN FOUR LONGITUDINAL JOINTS TOGETHER FOR NEW CONSTRUCTION AND RECONSTRUCTION. CONTACT JOINT TIE BARS REQUIRED AT ALL LOCATIONS WHERE CONCRETE IS TO BE EXTENDED. SEE STD DWG PV 2 AND PV 3 FOR JOINT DETAILS.
4. SEE STRUCTURE PLANS FOR EXPANSION JOINT DETAILS.
5. ALL LONGITUDINAL JOINTS CAN BE CONTACT JOINTS OR SAWED JOINTS.

REVISIONS

NO.	DATE	APPR.	REMARKS
1	10-26-17	SA	ADDED THE SKEWED APPROACH SLAB DETAILS, CHANGES TO NOTES

UTAH DEPARTMENT OF TRANSPORTATION
STANDARD DRAWINGS FOR ROAD AND BRIDGE CONSTRUCTION
SALT LAKE CITY, UTAH
STANDARD DRAWING EDITION
2024 Standard Drawing

JOINTS FOR HIGHWAYS WITH CONCRETE TRAFFIC LANES AND SHOULDERS
STANDARD DRAWING TITLE

STD. DWG. NO.
PV 1

SCALE: HOR. NA VERTICAL SCALE: NA
VERIFY SCALE
BAR IS ONE-HALF INCH ON ORIGINAL DRAWING

DESIGNED BY: JGW
DRAWN BY: BS
CHECKED BY: VBG
APPROVED BY: JGW
DATE: March 2024
ENO NO: XXXXXXX
ACCOUNT NO: ----

REVISIONS

NO.	DATE	MADE BY	AUTH. BY

OGDEN CITY
21ST STREET SEWER MAIN UPGRADE
UDOT STANDARD DRAWINGS

DRAWING NO.
PV-1
SHEET 32 OF 36

P:\West Jordan\2023\Projects\W230903UT.00 - Ogden - 21st Sewer Main Upgrade\03_Design\Sheets\UDOT Details.dwg Mar 29, 2024 - 9:56am
5-APR-2023
IDON Files\Standards and Specs\Section\2024 Standards (pub. Spring 2023)\Electronic Books\Master Drawings\DRAWINGS\PV01.dgn

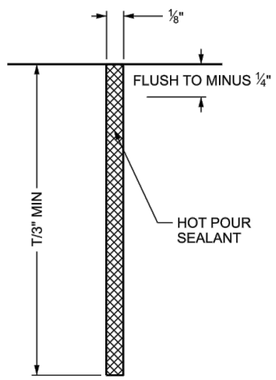

DETAIL "A"

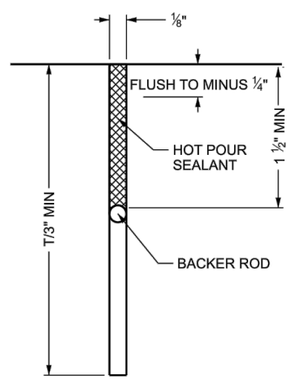

DETAIL "B"

OPTIONAL INSTALLATION

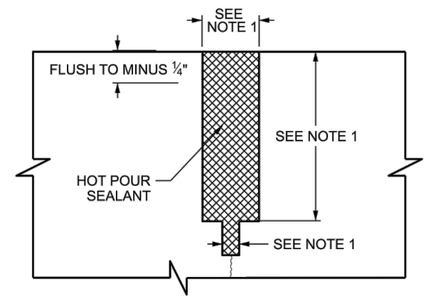

DETAIL "D"

REHABILITATION OF EXISTING SILICONE JOINT

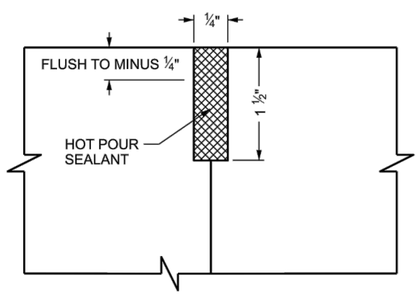

DETAIL "C"

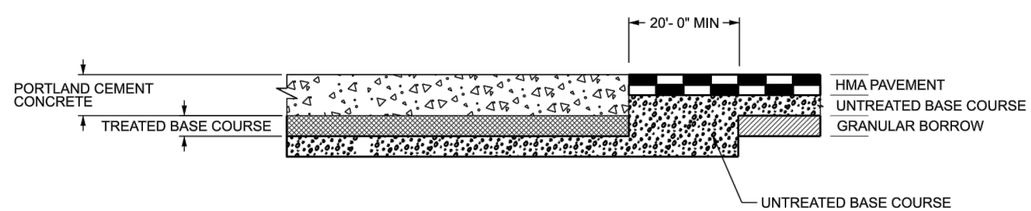

DETAIL "E"

CONCRETE TO FLEXIBLE PAVEMENT TRANSITION

NOTES:

1. DIMENSIONS MAY VARY DEPENDING ON ORIGINAL JOINT CONSTRUCTION.

UDOT STANDARD DRAWINGS 10/33

SCALE: NTS

REVISIONS

NO.	DATE	SA	SHEET NUMBER CHANGED, NOTES
1	10-26-17		

NO.	DATE	APPR.	REMARKS

UTAH DEPARTMENT OF TRANSPORTATION

STANDARD DRAWINGS FOR ROAD AND BRIDGE CONSTRUCTION

SALT LAKE CITY, UTAH

STANDARD DRAWING EDITION

2024 Standard Drawing

CONCRETE PAVEMENT DETAILS 1 OF 2

STANDARD DRAWING TITLE

STD. DWG. NO.

PV 2

SCALE: HOR. NA VERTICAL SCALE: NA

VERIFY SCALE

BAR IS ONE-HALF INCH ON ORIGINAL DRAWING

DESIGNED BY: JGW
DRAWN BY: BS
CHECKED BY: VBG
APPROVED BY: JGW
DATE: March 2024
ENG NO: XXXXXXX
ACCOUNT NO: ----

REVISIONS

NO.	DATE	MADE BY	AUTH. BY

OGDEN CITY

21ST STREET SEWER MAIN UPGRADE

UDOT STANDARD DRAWINGS

Ogden Salt Lake Valley

DRAWING NO. PV-2

SHEET 33 OF 36

P:\West Jordan\2023\Projects\W23090JT.00 - Ogden - 21st Sewer Main Upgrade\03_Design\Sheets\UDOT Details.dwg Mar 29, 2024 - 9:56am

DGN File:Q:\Standards\Specs\Section\2024 Standards (pub.Spring 2023)\Electronic Books\Master Drawings\DRAWINGS\PV02.dgn

5-APR-2023

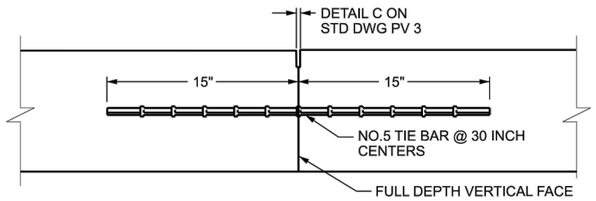

LONGITUDINAL CONTACT JOINT DETAIL "A"

NOTE: NO. 5 TIE BAR @ 15 INCH CENTERS
IF DRILLED AND EPOXIED.

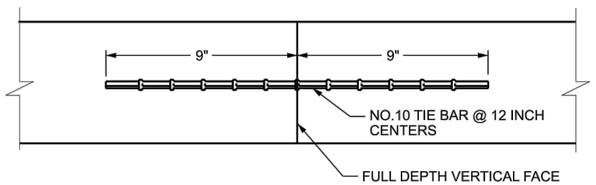

MID-PANEL CONTACT JOINT DETAIL "B"

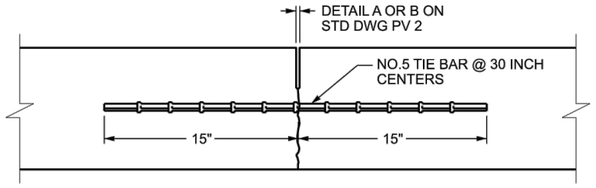

LONGITUDINAL SAWED JOINT DETAIL "C"

(T/3 SAW CUT W/ AGGREGATE INTERLOCK BELOW)

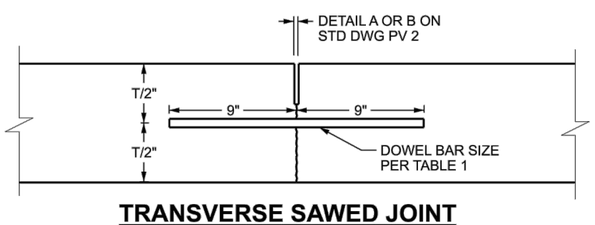

TRANSVERSE SAWED JOINT (LOAD TRANSFER DOWEL BAR JOINT) DETAIL "D"

INSTALL DOWEL BARS PARALLEL TO THE CENTERLINE
AND TO THE PAVEMENT SURFACE.
LIMIT DEVIATIONS FROM PARALLEL TO ± ¼ INCH
IN THE LENGTH OF THE DOWEL BAR.

JOINT SECTION DETAILS

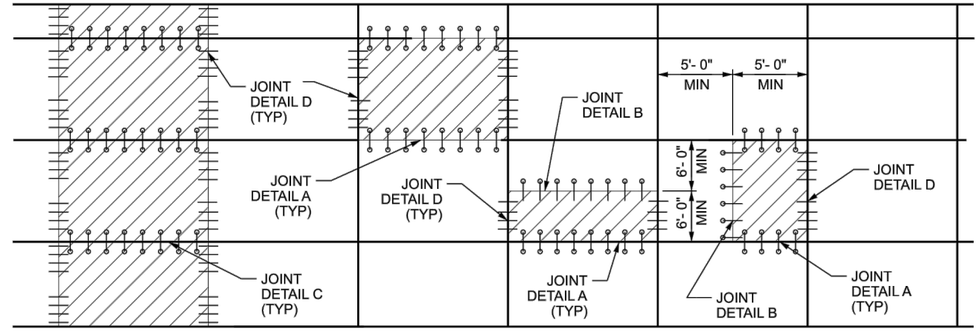

TYPICAL PAVEMENT PANEL REPLACEMENT

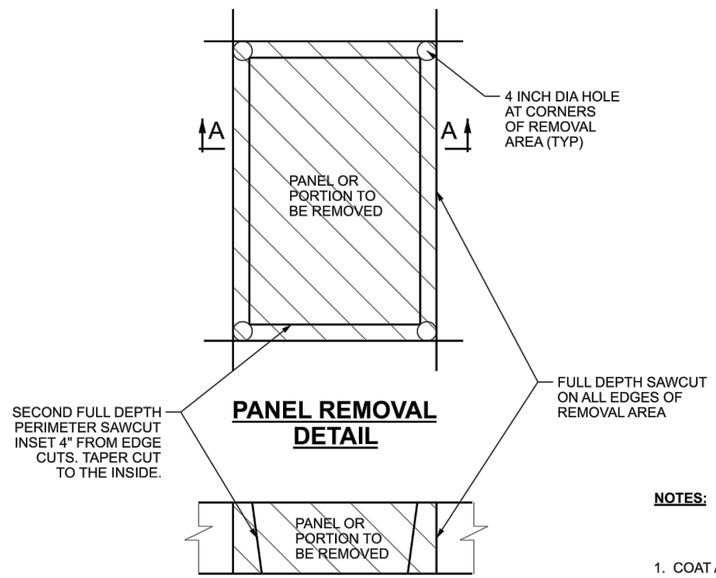

PANEL REMOVAL DETAIL

SECTION A-A

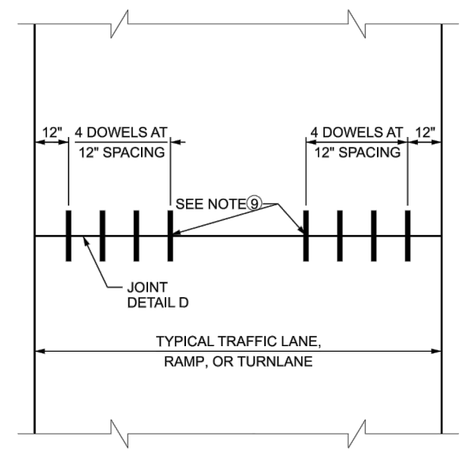

LOAD TRANSFER DOWEL BAR LAYOUT FOR NEW PAVEMENT

TABLE 1	
PAVEMENT THICKNESS	DOWEL BAR DIAMETER
LESS THAN 9"	1"
≥ 9" AND < 11"	1.25"
11" OR GREATER	1.5"

NOTES:

1. COAT ALL BARS ACCORDING TO STANDARD SPECIFICATION 03211.
2. USE DEFORMED REINFORCING BAR FOR TIE BARS.
3. USE SMOOTH DOWEL BARS.
4. MAKE FULL DEPTH SAWCUT AROUND ALL EDGES OF PANELS OR PORTIONS REPLACED. MINIMIZE OVERCUT INTO ADJACENT PANELS.
5. REPLACE THE ENTIRE PANEL WHEN REPLACING A PARTIAL PANEL IF THE WIDTH OF REMAINING PORTION IS LESS THAN THE MINIMUM SHOWN.
6. DO NOT INSTALL DOWEL BARS IN THE SHOULDERS UNLESS DIRECTED TO DO SO BY THE PROJECT SPECIFIC SPECIAL PROVISION OR PLAN SHEET.
7. PARTIAL PANEL REPLACEMENTS APPLY ONLY TO THE REHABILITATION OF EXISTING PAVEMENTS AND NOT TO PROJECTS CONSTRUCTING NEW OR ORIGINAL PAVEMENT. REPAIRS TO PAVEMENT ON NEW PROJECTS REQUIRE FULL PANEL REPLACEMENT.
8. ELIMINATE TIE BARS THAT INTERFERE WITH "LOAD TRANSFER DOWEL BARS".
9. THREE DOWELS, INSTEAD OF FOUR, AT 12 INCH SPACING UNDER EACH WHEEL PATH IS ACCEPTABLE, WHEN CONCRETE IS ON ASPHALT. REMOVE THE INSIDE DOWEL BAR IN EACH WHEEL PATH.

REVISIONS

NO.	DATE	SA	SHEET NUMBER CHANGED, NOTES AND DETAIL TITLES CHANGED
1	10-26-17		

UTAH DEPARTMENT OF TRANSPORTATION
STANDARD DRAWINGS FOR ROAD AND BRIDGE CONSTRUCTION
SALT LAKE CITY, UTAH
STANDARD DRAWING EDITION
2024 Standard Drawing

CONCRETE PAVEMENT DETAILS 2 OF 2
STANDARD DRAWING TITLE

STD. DWG. NO.
PV 3

SCALE: HOR. NA VERTICAL SCALE: NA
VERIFY SCALE
BAR IS ONE-HALF INCH ON ORIGINAL DRAWING

DESIGNED BY: JGW
DRAWN BY: BS
CHECKED BY: VBG
APPROVED BY: JGW
DATE: March 2024
ENG NO.: XXXXXXX
ACCOUNT NO.: ----

REVISIONS

NO.	DATE	MADE BY	AUTH. BY

OGDEN CITY
21ST STREET SEWER MAIN UPGRADE
UDOT STANDARD DRAWINGS

DRAWING NO.
PV-3
SHEET 34 OF 36

P:\West Jordan\2023\Projects\W23090JT.00 - Ogden - 21st Sewer Main Upgrade\03_Design\Sheets\UDOT Details.dwg Mar 29, 2024 - 9:56am
DGN Files Q:\StandardsandSpecsSection\2024 Standards (pub. Spring 2023)\Electronic Books\Master Drawings\DRAWINGS\PV03.dgn
5-APR-2023

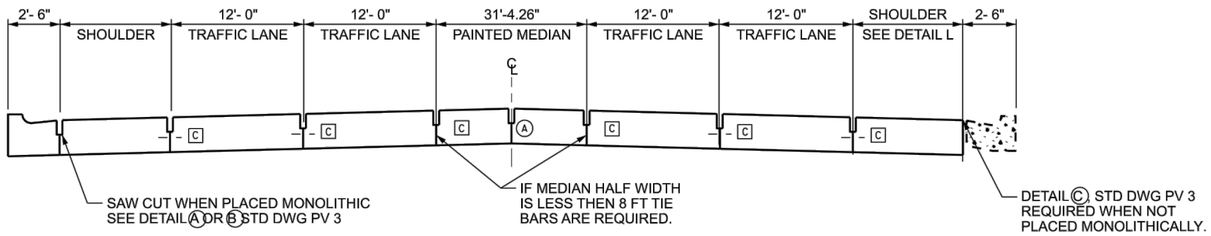

PAVEMENT TRANSITION

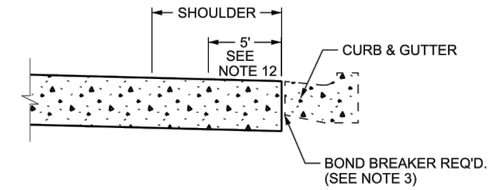

DETAIL L

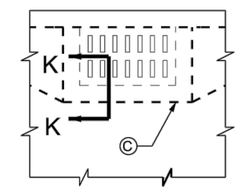

CATCH BASIN DETAIL K

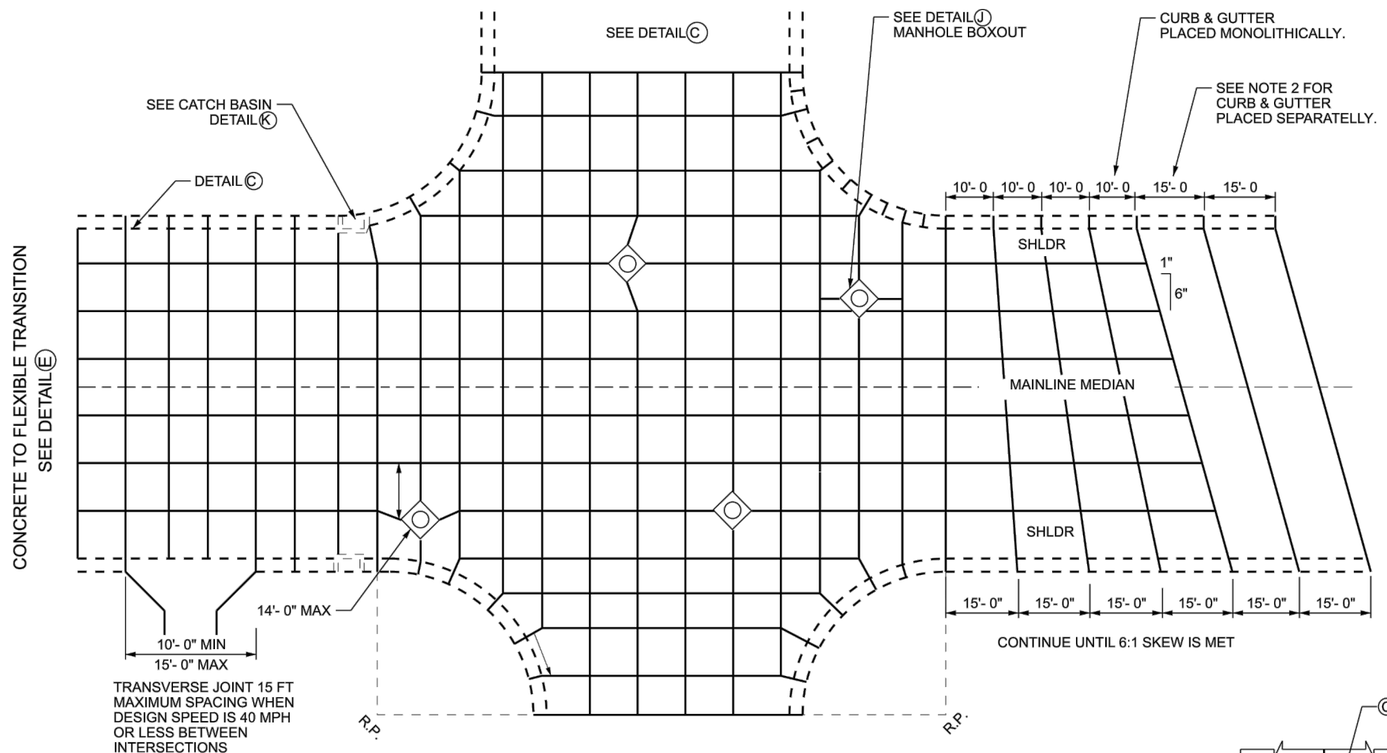

CONCRETE TO CONCRETE TRANSITION

SEE NOTE 7.

INTERSECTION JOINT LAYOUT

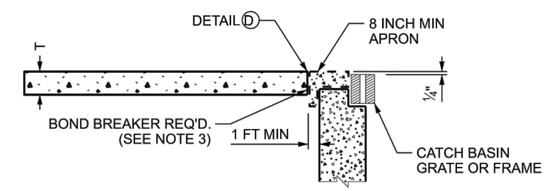

SECTION K- K

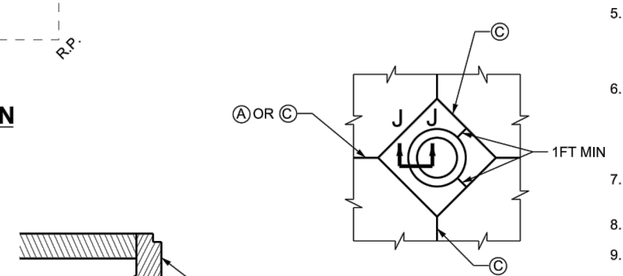

MANHOLE BOXOUT DETAIL J

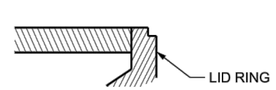

SECTION J- J

NOTES:

1. CURB & GUTTER JOINTS TO BE CONTINUOUS WITH PAVEMENT WHEN PLACED MONOLITHICALLY WITH PAVEMENT.
2. CURB & GUTTER JOINTS NORMAL TO THE FLOWLINE AND AT ONE HALF THE PAVEMENT JOINT SPACING, WHEN PLACED SEPARATELY FROM THE PAVEMENT.
3. PLACE A BOND BREAKER AS SHOWN IN DETAIL L AND SECTION K-K WHERE CONCRETE PAVEMENT IS PLACED AGAINST EXISTING CURB & GUTTER, DRIVEWAYS AND WALKWAYS.
4. REFER TO PROJECT SPECIFICATIONS FOR JOINT INFORMATION AND DETAILS.
5. PREFERRED TRANSVERSE JOINT LOCATIONS ARE: MORE THAN 5 FT FROM LARGE APPURTENANCES WITH NO BOXOUT: OR AT THE CORNER OF RECTANGULAR BOXOUTS OR APPURTENANCES.
6. SHORTEN ONE OR MORE PANELS EITHER SIDE OF OPENING TO PERMIT JOINT TO FALL AT CORNERS OF RECTANGULAR STRUCTURES WHEN A JOINT FALLS WITHIN 5 FT OF OR CONTACTS BASINS, MANHOLES, OR OTHER STRUCTURES.
7. DETAIL C REQUIRED. WHEN CROSS STREET IS CONCRETE AND AT STRUCTURES.
8. SEE STD DWG GW 3 FOR CURB & GUTTERS DETAILS.
9. SEE STD DWG GW 6 FOR DRIVEWAY DETAILS.
10. LETTER INSIDE ◯ DENOTES DETAIL, STD DWG PV 3
11. LETTER INSIDE ☐ DENOTES DETAIL, STD DWG PV 4
12. SLOPE OF 5 FT SECTION NEXT TO CURB AND GUTTER MAY BE STEEPENED TO MATCH LIP OF EXISTING GUTTER.

REVISIONS

NO.	DATE	APPR.	REMARKS

UTAH DEPARTMENT OF TRANSPORTATION
STANDARD DRAWINGS FOR ROAD AND BRIDGE CONSTRUCTION
SALT LAKE CITY, UTAH
STANDARD DRAWING EDITION

2024 Standard Drawing

URBAN CONCRETE PAVEMENT DETAILS

STANDARD DRAWING TITLE

STD. DWG. NO.
PV 5

SCALE: NA
VERTICAL SCALE: NA

VERIFY SCALE
BAR IS ONE-HALF INCH ON ORIGINAL DRAWING

DESIGNED BY: JGW
DRAWN BY: BS
CHECKED BY: VBG
APPROVED BY: JGW
DATE: March 2024
ENG NO: XXXXXXX
ACCOUNT NO: ----

REVISIONS

NO.	DATE	MADE BY	AUTH. BY

OGDEN CITY
21ST STREET SEWER MAIN UPGRADE

UDOT STANDARD DRAWINGS

Ogden
Salt Lake County

PROFESSIONAL ENGINEER
No. 10465507-2202
JOSEPH CLYDE WILLARDSON
STATE OF UTAH
3-29-24

DRAWING NO.
PV-5

SHEET 35 OF 36

P:\West Jordan\2023\Projects\W230903UT.00 – Ogden – 21st Sewer Main Upgrade\03_Design\Sheets\UDOT Details.dwg Mar 29, 2024 – 9:56am
UDOT Plan Un\Standardsandspecs\Section\2024 Standards (pub-Spring 2023)\Electronic Books\Master Drawings\Drawings\PV\pv5.dgn
B-PRP-2023